Digital indicator with relay outputs PMS-970T

- ✓ **Universal measuring input 4...20 mA, 0...20 mA or 0...10 V**
- ✓ **4 relay outputs: 1 A, 250 V AC**
- ✓ **RS-485 digital output**
- ✓ **4 × 7 mm red LED display + 26-point bargraph**
- ✓ **Integrated power supply 24 V DC**
- ✓ **Additional options:**
  - ⇨ **passive current output**

Outer dimensions:
width **48,** height **96,** depth **120 [mm]**
Dimensions of panel cut-out:
43 × 90,5 [mm]

Functions and use

The programmable PMS-970T indicator is applicable to cooperation with the transmitters having a standard current or voltage output signal. Measurement is visible on 4-digit indication and 26-point bargraph. Four alarm values controlling the relay outputs can be programmed. Alarm values are indicated on bargraph and exceeding of the alarm values is indicated by diodes on the front of the display. The device can use a linear characteristic or a multi-segment characteristic freely definable by the user. The meter has RS-485/MODBUS RTU digital output and can also be provided with an a passive current output with programmable range of current variation.

The PMS-970T enables the following parameters to be programmed:

- measuring value display range and decimal point position;
- level and hysteresis of action of relays;
- relay operation mode: normally connected or normally disconnected;
- input signal conversion characteristic (segmental approximation, max. 15 segments);
- display filtering level;
- “alternating control of outputs” function used to balance wear on groups of pumps.
- two modes of bargraph: 2 and 3 color.

Wiring diagram

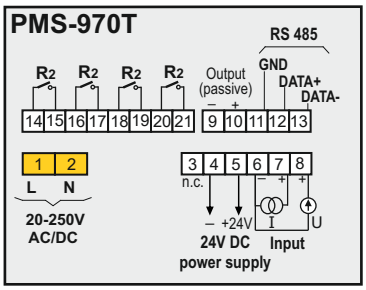

Technical data

Input signal	0/4...20 mA or 0...10 V
Display range	-999 to 9999
Display error	±0.1%
Relay outputs	4 × 1 A/250 V AC, NO
special version:	2 × 1 A/250 V AC, NO/NC
Power supply	20..250 V AC/DC
Integrated power supply	24 V DC stab., max. 25 mA
Operating temperature range	-20…50°C
Storage temperature	-20…70°C
Casing	panel type, IP65 (from the front)

Ordering procedure

PMS-970T /___

Special version:
2 – version with 2 relay outputs
WY – passive current output

Digital indicator with relay outputs PMS-970P

- ✓ **Universal measuring input 4...20 mA, 0...20 mA or 0...10 V**
- ✓ **4 relay outputs: 1 A, 250 V AC**
- ✓ **4 × 20 mm red LED display**
- ✓ **RS-485 digital output**
- ✓ **Integrated power supply 24 V DC**
- ✓ **Additional options:**
  - ⇨ **passive current output**

Functions and use

The programmable PMS-970P indicator is applicable to cooperation with the transmitters having a standard current or voltage output signal. Four alarm values controlling the relay outputs can be programmed. Diodes on the front of the indicator indicate the exceeding of the alarm values. The device can use a linear characteristic or a multi-segment characteristic freely definable by the user. The meter has RS-485/MODBUS RTU digital output and can also be provided with a passive current output with programmable range of current variation.

The PMS-970P enables the following parameters to be programmed:

- measuring value display range and decimal point position;
- level and hysteresis of action of relays;
- relay operation mode: normally connected or normally disconnected;
- input signal conversion characteristic (segmental approximation, max. 15 segments);
- display filtering level;
- "alternating control of outputs" function used to balance wear on groups of pumps.

Outer dimensions:
width **96,** height **48,** depth **100 [mm]**
Dimensions of panel cut-out:
90.5 × 43 [mm]

Technical data

Input signal	0/4...20 mA or 0...10 V
Display range	-999 to 9999
Display error	±0.1%
Relay outputs	4 × 1 A/250 V AC, NO
special version:	2 × 1 A/250 V AC, NO/NC
Power supply	230 V AC
special version:	24V AC/DC
Integrated power supply	24 V DC stab., max. 25 mA
Operating temperature range	-20…50°C
Storage temperature	-20…70°C
Casing	panel type, IP65 (from the front)

Wiring diagram

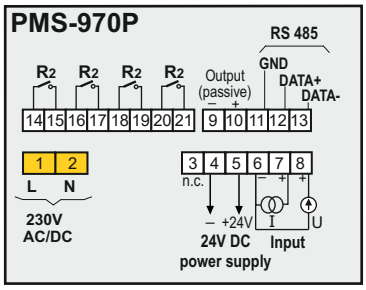

Ordering procedure

PMS-970P /___

Special version:
2 – version with 2 relay outputs
WY – passive current output
24 - power supply 24 V AC/DC

Digital indicator with relay outputs PMS-620N

M12x1,5 cable gland

- ✓ **4 × 20 mm red LED display**
- ✓ **Current input 4…20mA or 0…20mA**
- ✓ **Voltage input 0…5V, 1…5V, 0…10V, 2…10V**
- ✓ **Two relay outputs: 1 A, 250 V AC**
- ✓ **RS-485 digital output**
- ✓ **Integrated power supply 24 V DC**
- ✓ **Wall mounted casing, IP65**

Application and function

The programmable PMS-620N indicator is applicable to cooperation with the transmitters having a standard input current and voltage signals . Two alarm values controlling the relay outputs can be programmed. Diodes on the front of the indicator indicate the exceeding of the alarm values. The relay outputs have a pair of operating contacts. The transmitter can be powered directly from the indicator with a built-in auxiliary 24 V DC supply unit.

The casing with a degree of protection IP-65 makes the display possible to be operated under difficult environmental conditions.

The following parameters can be programmed with the PMS-620N indicator:

- type of input signal
- measured value display range and decimal point position;
- level and hysteresis of action of relays;
- status of contact during alarm;
- password restricting access to programming menu;

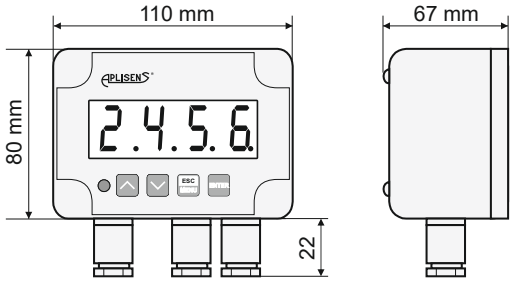

Wiring diagram

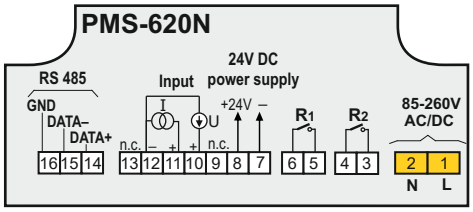

Technical data

Input signal	4...20 mA, 0...20 mA 0..5V, 0..10V, 1..5V, 2..10V
Display range	-999 to 9999
Display error	0,1% ± 1 digit
Relay outputs	2 (NO) 1 A, 250 V AC, cos φ = 1
Power supply	230 V AC ± 10%, max. 4,5 VA
Integrated power supply	24 V DC stab., max. 100 mA
Operating temperature	-20…50°C
Storage temperature	-20…70°C
Casing	wall mounted, IP 65

Ordering procedure

PMS-620N

Chapter VII

Power supplies, isolators, signal converters, overvoltage protection

Power supply ZL-25-01 ..... VII/ 2

Power supply ZL-24-08 ..... VII/ 3

Power supply ZL-30 ..... VII/ 4

Current signal isolator
without auxiliary power SP-02 ..... VII/ 5

Power supply / isolator / signal converters
ZSP-41/1 and ZSP-41/2 ..... VII/ 6

Isolator / signal converter SP-11 ..... VII/ 7

Intrinsically safe power supply and isolator
ZS-30Ex ..... VII/ 8

Intrinsically safe power supply and isolator
ZS-31Ex ..... VII/ 10

Overvoltage protection circuit UZ-2 ..... VII/ 12

Power supply ZL-25-01

- ✓ **Output power supply 2x24 V DC**
- ✓ **Maximum output current 2 × 50 mA**
- ✓ **Indication of presence of output voltage**
- ✓ **Permanently resistant to short circuits and excess voltage**
- ✓ **Casing can be fitted on a standard rail (TS35, TS32)**

Applications and functions

The ZL-24-01 power supply is used with a 230 V, 50 Hz AC network supply to power devices requiring direct current (output voltage in the range 5 ÷ 30 V, standard value 24 V).

The product is available with two voltage DC output 2x24 V DC (2x50mA). To increase output current both channels should be parallel connected.

The ZL-25-01 is typically used to power devices requiring a 24 V DC power supply.

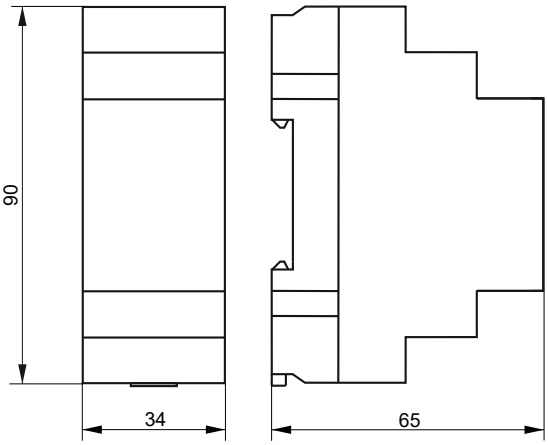

Technical parameters

Input voltage	230 V, 50 Hz (±10%)
Output voltage	2x24 VDC ±1,2 V DC (special versions: 5 ÷ 30 V)
Maximum load current	2 × 50 mA
Galvanic separation	network transformer
Strength test parameters	1,5 kVAC, 50 Hz, 1 min
Ambient temperature	5...60°C
Ingress protection rating	IP20
Weight	0,4 kg

Ordering procedure

Standard version: **ZL-25-01**

Special version: **ZL-25-01/___/___**

Output voltage (value from 5 to 30 V)

Electrical diagrams

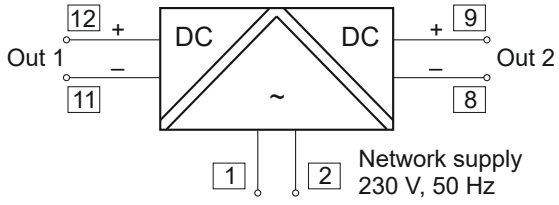

Power supply ZL-24-08

- ✓ **Maximum output current 800 mA**
- ✓ **High energy efficiency**
- ✓ **Indication of the presence of output voltage**
- ✓ **Permanently resistant to short circuiting and excess voltage**
- ✓ **Overvoltage protection**
- ✓ **Casing can be fitted on a standard rail (TS35, TS32)**

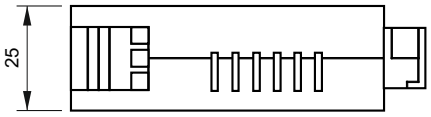

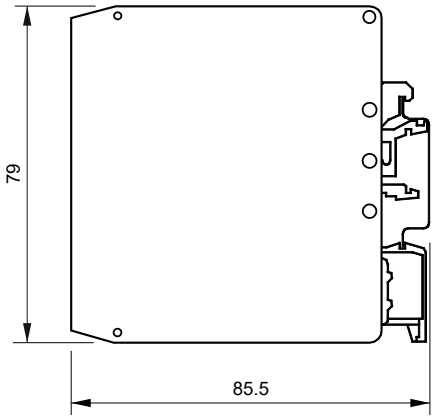

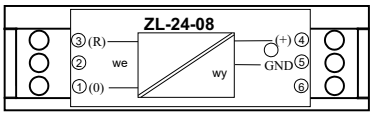

View of front plate

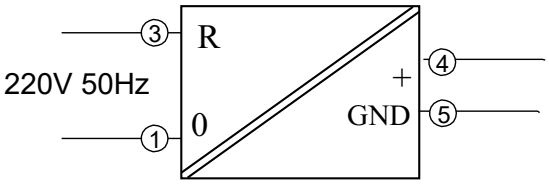

Electrical diagram

Applications and functions

The ZL-24-08 power supply is typically used with a 230 V, 50 Hz AC network supply to power devices requiring direct current (output voltage in the range 5 ÷ 48 V, standard value 24 V).

The ZL-24-08 is typically used to power automatic devices requiring a 24 V DC power supply.

Technical parameters

Input voltage	230 V, 50 Hz (+15%, -20%)
Input current	≤ 100 mA
Output voltage	24 ± 1,2 V DC
(special versions:	5 ÷ 48 V)
Maximum load current	0,8 A
Constant load current	0,1...0.5 A
Output power	≤ 20 W
Galvanic separation	pulse transformer
Strength test parameters	1,5 kV AC, 50 Hz, 1 min
Effect of load fluctuations	≤ 5% / 350 mA
Effect of supply voltage fluctuations	≤ 2%
Ambient temperature	5...60°C
Casing	UEGM 25 (PHOENIX)
Ingress protection rating	IP20
Weight	0,25 kg

NOTE: when installing, always ensure a sufficient gap between the power supply and other devices to enable heat to escape. The minimum distance from the side walls of the power supply is 15 mm.

Ordering procedure

Standard version: **ZL-24-08**

Special version: **ZL-....-08**

Output voltage (value from 5 to 48 V)

Power supply and isolator ZS-30 for two-wire transmitters

- ✓ **Universal power supply: 20…253 V AC/DC**
- ✓ **Full galvanic separation of circuits (IN-OUT, IN-SUPPLY, OUT-SUPPLY)**
- ✓ **Digital calibration of measurement chain IN-OUT**
- ✓ **Accuracy 0,1%**

Application and function

The ZS-30 power supply and isolator is designed to supply power to transmitters with a 4...20 mA signal in a two-wire transmission and to transform that signal through a galvanic separation circuit into one of the standard signals used in automatic control: 4…20mA, 0…20mA; 0…5mA; 0…10V, 0…5V, 1…5V, 2…10V. IN, OUT and SUPPLY circuits are galvanic separated.

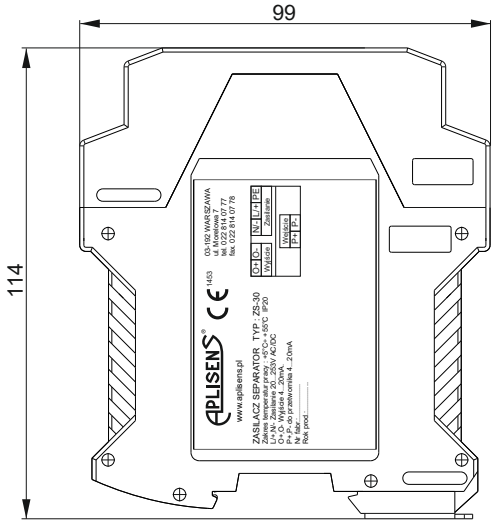

Technical parameters

Input parameters

Supply voltage U_{IN}	22,5 V
Input signal I_{IN}	4 ÷ 20 mA

Output parameters

Output signal I_{OUT}, U_{OUT}	Load resistance R_O
4 ÷ 20 mA (standard version)	Ro 0 ÷ 500 Ω
0 ÷ 20 mA	Ro 0 ÷ 500 Ω
0 ÷ 5 mA	Ro 0 ÷ 2 kΩ
0 ÷ 5 V, 1 ÷ 5 V, 0 ÷ 10 V, 2 ÷ 10 V	Ro ≥ 10 kΩ

Supply parameters

Power supply	20…253 V AC/DC
Test voltage between circuits	1,5 kV, 50 Hz
Power consumption	≤ 2 W
Supply current (starting)	max. 0,6 A (for U_{SUP} = 20 V DC)

Metrological parameters

Accuracy	≤ 0,1%
Effect of load resistance fluctuations	≤ ±0,05%
Effect of temperature fluctuations	≤ ±0,01% / °C

Ambient temperature	5…55 °C
Ingress protection rating	IP20
Weight	< 0,15kg

Electric diagram

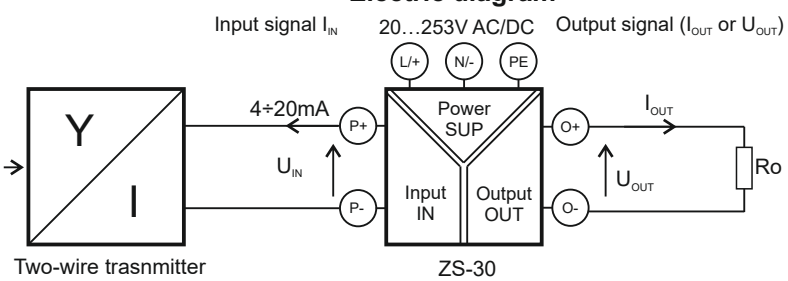

Ordering procedure

Standard version (I_{OUT}=4÷20 mA):

ZS-30

Specicial version:

ZS-30/___

Output signal

SP-02 current signal isolator without auxiliary power

- ✓ **Single circuit or dual circuit version in 12,5 mm wide casing**
- ✓ **Accuracy 0,16%**
- ✓ **Casing can be fitted on a standard rail (TS35, TS32)**

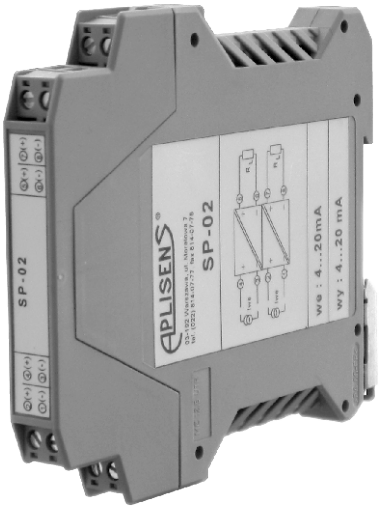

Applications and functions

The SP-02 signal isolator provides galvanic separation of an input signal (0/4...20 mA) and converts it, through a separation system into an output signal (0/4...20 mA), with a two-wire power supply in the input signal loop.

The device is typically used to provide galvanic separation between the measurement circuits installed on an object, and the main section. This enables the effect of object-related interference in the monitoring, control and recording systems of automatic devices to be largely eliminated.

Technical parameters

Input data	
Input signal	0/4...20 mA
Voltage drop at input	≤ 3,5 V + I_{OUT} × R_O
Output data	
Output signal	0/4...20 mA
Load resistance R_O	0...500 Ω
Galvanic separation	transformer-based
Strength test parameters	1,5 kV, 50 Hz, 1 min
Dynamic characteristics	
Transmission band	5 Hz (3 dB)
Conversion errors	
Accuracy	≤ ±0,16%
When converting a 0...20 mA signal to 0...20 mA in the range below 1% of signal, the error increases to ±0,5%.	
Effect of temperature fluctuations	0,1% / 10°C
Effect of load resistance fluctuations	0,1% / 100 Ω
Conditions of normal use	
Ambient temperature	5...60°C
Relative humidity	30...80%
Casing	
Type	ME 12.5 (PHOENIX)
Ingress protection rating	IP20
Weight	0,1 kg

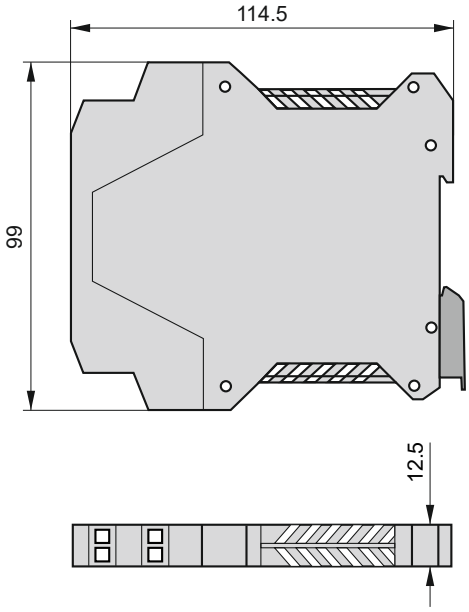

Ordering procedure

Standard version: **SP-02 /___**

Special version: **SP-02 / 0...10 V /___**
(with 0...10 V voltage output)

Number of circuits (1 or 2)

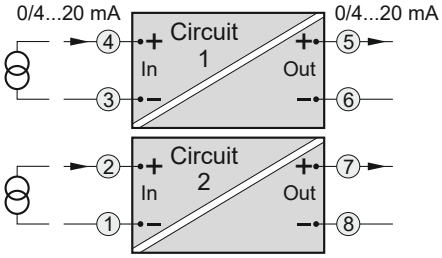

Electrical diagram

Power supply/isolator/signal converter ZSP-41/1 and ZSP-41/2

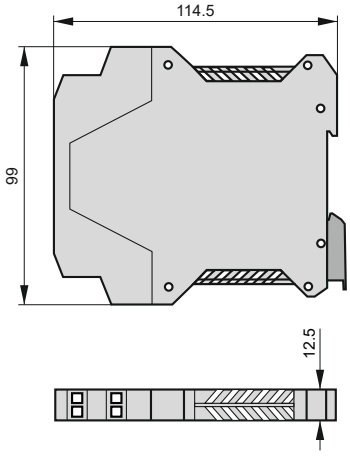

- ✓ **Full galvanic separation of circuits (IN-OUT, IN-SUP, OUT-SUP)**
- ✓ **Ability to select input and output signals**
- ✓ **Ability to use input line to power a two-wire transmitter**
- ✓ **Casing can be fitted on a standard rail (TS35)**

Applications and functions

The ZSP-41 provides galvanic separation of an input signal (4 ÷ 20 mA, 0 ÷ 20 mA, 0 ÷ 10 V) and converts it, through a separation system into an output signal. An additional input line may be connected to any two-wire transmitter to provide it with a 19 ÷ 24 V. The device is typically used to provide galvanic separation between the measurement circuits installed on an object, and the main section.

Configuration, calibration

The user can use switches to configure input and output settings for the following signals. Access to switches by removing the front panel. Isolator can be produced to support other input and output signals. Calibration is carried out using potentiometers.

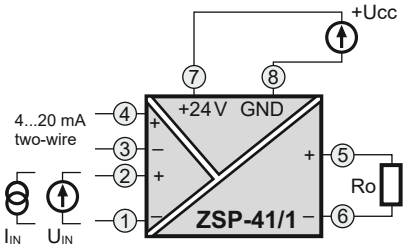

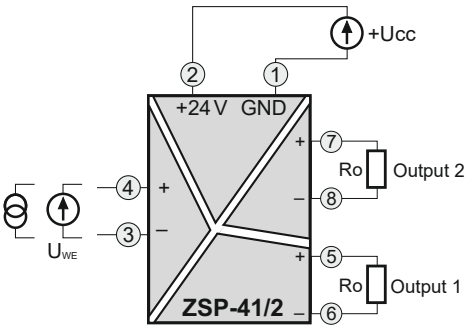

Technical parameters

- **Input parameters**
  Input signal (selected by switch)
  0...20 mA, 4...20 mA, 0...10 V
  Input resistance
  ≥ 50 kΩ (voltage input) / ≤ 50 Ω (current input)
- **Output parameters**
  Output signal (selected by switch)
  0...20 mA, 4...20 mA, 0...10 V
  Load resistance
  0...500 Ω (current output) / ≥ 1 kΩ (voltage output)
- **Galvanic separation**: opto-electronic
  Strength test parameters
  1,5 kV AC, 50 Hz, 1 min
- **Dynamic characteristics**
  Transmission band: 5 Hz (3 dB)
- **Power supply**
  Supply voltage: 24 V ± 20%
  Supply current: ≤ 100 mA
- **Conditions of normal use**
  Ambient temperature: 5...60°C
  Relative humidity: 30...80%
- **Casing**
  Type: UEGM 22.5 (PHOENIX)
  Ingress protection rating: IP20
- **Weight**: 0,1 kg
- **Conversion errors**
  Accuracy: ≤ ±0,16%
  Typically, the converter is set for the range 4...20 mA / 4...20 mA. Setting of a different range will lower the class of the converter to 0,25% (tuning is possible using trimmers accessible from the front plate).

Ordering procedure

Standard version: **ZSP-41/1**

Special version: **ZSP-41/1 /___/___**

Input signal

Output signal

Standard version: **ZSP-41/2**

Special version: **ZSP-41/2 /___/___**

Input signal

Output signal

Isolator/signal converter SP-11

- ✓ **Single circuit or dual circuit version in 12,5 mm wide casing**
- ✓ **Opto-electronic galvanic separation (IN-OUT)**
- ✓ **Ability to select input signal**
- ✓ **9...36 V power supply in the output signal loop**
- ✓ **Casing can be fitted on a standard rail (TS35)**

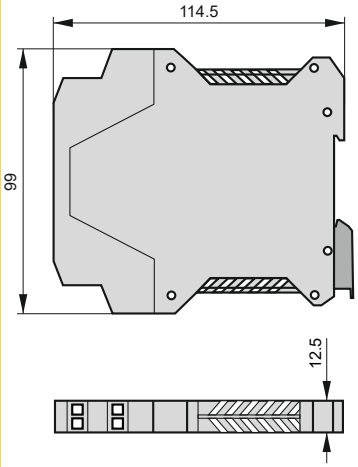

Applications and functions

The SP-11 signal isolator provides galvanic isolation of an input current or voltage signal and converts it, through a separation system into an output signal 4...20 mA with a two-wire power supply in the output signal loop.

The device is typically used to provide galvanic isolation between the measurement circuits installed on an object, and the main section.

Configuration, calibration

The user can use switches to configure input and output settings for the following signals

Technical parameters

- **Input parameters**
  Input signal (selected by switch)
  0...20 mA, 4...20 mA, 0…5mA, 1…5mA,
  0...10 V, 2…10V
  Input resistance
  ≥ 50 kΩ (voltage input) / 20 Ω (current input)
- **Output parameters**
  Output signal: 4...20 mA
  Load resistance: 0...500 Ω
- **Galvanic separation**: opto-electronic
  Strength test parameters
  1,5 kV AC, 50 Hz, 1 min
- **Dynamic characteristics**
  Transmission band: 5 Hz (3 dB)
- **Power supply**
  Supply voltage: 9...36 V
- **Conditions of normal use**
  Ambient temperature: 5...60°C
  Relative humidity: 30...80%
- **Casing**
  Type: UEGM 22.5 (PHOENIX)
  Ingress protection rating: IP20
- **Weight**: 0,1 kg
- **Conversion errors**
  Accuracy: ≤ ±0,16%
  Typically, the converter is set for the range 4...20 mA / 4...20 mA. Setting of a different range will lower the class of the converter to 0,25% (tuning is possible using trimmers accessible from the front plate).

Electrical diagram

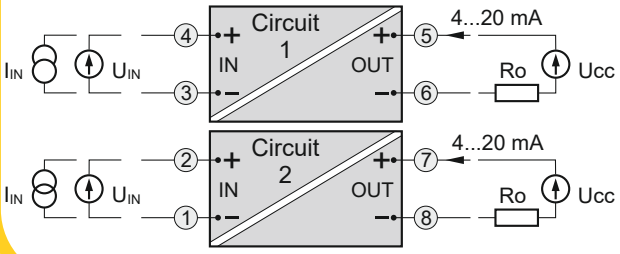

Ordering procedure

Standard version: **SP-11 /___**

Special version: **SP-11 /__÷__/___**

Input signal

Number of circuits (1 or 2)

Intrinsically safe power supply and isolator ZS-30Ex1

- ✓ Ex I (M1) [Ex ia Ma] I
  II (1)G [Ex ia Ga] IIC
  Ex-rated intrinsically safe
- ✓ **Full galvanic separation of circuits (IN-OUT, IN-SUPPLY, OUT-SUPPLY)**
- ✓ **Accuracy 0,1%**
- ✓ **Casing can be mounted on a standard TS35 rail**

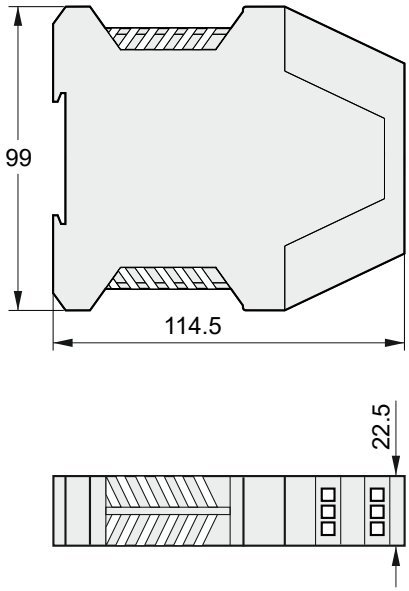

Application and functions

The ZS-30Ex1 power supply and isolator is a partially intrinsically safe device with an external (input) intrinsically safe circuit.

The ZS-30Ex1 is designed to supply power to intrinsically safe transmitters used in a hazardous area, with a 4...20 mA signal in a two-wire transmission, and to transform that signal through a galvanic separation circuit into one of the standard signals used in automatic control.

The supply voltage of the intrinsically safe input circuit of the standard version of the ZS-30Ex1 is 25 V DC. At the customer's request this voltage can be altered to 16, 18, 22 or 24 V DC.

The output circuit can be connected to any apparatus with a separated supply voltage of < 250 V (from transformer-based network supplies).

Calibration

The user can adjust the setting of the start-point and width of the range using potentiometers accessible via marked holes in the front panel.

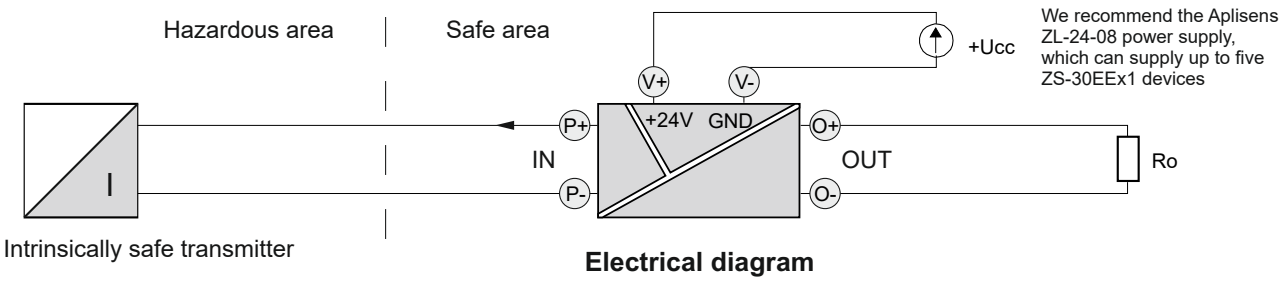

Electrical diagram

Technical parameters

- **Input parameters**

Input signal from the transmitter 4...20 mA

Standard version

Supply voltage of the input circuit U_{IN}	15 V	18 V	20 V	22 V	**25 V**
Maximum voltage on the terminals of the input circuit U_0	15,75 V	18,9 V	21 V	23,1 V	**25,5 V**

Input voltage after loading by the transmitter with output signal 4…20 mA $U_{IN20} = U_{IN}$ [V] · 0,75
U_{IN} is the supply voltage of the input circuit

Maximum shorting current of input circuit I_0 = 100 mA

- **Output parameters**

Output signal	Output load resistance
4...20 mA	**500 Ω**
0...20 mA	500 Ω
0...5 mA	2 kΩ
0...5 V, 1...5 V, 0...10 V	10 kΩ

Standard version

- **Galvanic separation**

IN-OUT optoelectronic
IN-SUPPLY, OUT-SUPPLY pulse transformer
Test voltage between circuits 2,5 kV AC, 50 Hz or equivalent DC

- **Conversion errors**

Accuracy 0,1%
Non-linearity ±0,05%
Effect of temperature fluctuations ≤ ±0,1% / 10°C
Effect of load resistance fluctuations ≤ ±0,05%
Effect of supply voltage fluctuations ≤ ±0,1%

- **Dynamic characteristics**

Time constant c. 0,05 s (by arrangement: 0,1...1 s)

- **Power supply**

Supply voltage 24V DC ± 10%
Permitted ripple ≤ 1%
Supply current ≤ 90 mA

- **Conditions of normal use**

Ambient temperature 5...60°C
Relative humidity 30...80%

- **Casing**

Ingress protection rating IP20

- **Weight** 0,2 kg

Ordering procedure

Standard version (U_{IN} = 25 V, output 4...20 mA): **ZS-30Ex1**

Special version: **ZS-30Ex1 /___/___**

Input circuit voltage

Output signal

Important: For transmitters in version ALW with switched on illumination of display and used internal resistor 250Ω should be specifed model ZS-30Ex1/24V/25.2V.

Intrinsically safe network power supply and isolator ZS-31Ex1

- ✓ I (M1) [Ex ia Ma] I
  II (1)G [Ex ia Ga] IIC
  Ex-rated intrinsically safe
- ✓ **Full galvanic separation of circuits (IN-OUT, IN-SUPPLY, OUT-SUPPLY)**
- ✓ **Accuracy 0,1%**
- ✓ **Casing can be mounted on a standard rail (TS35, TS32)**

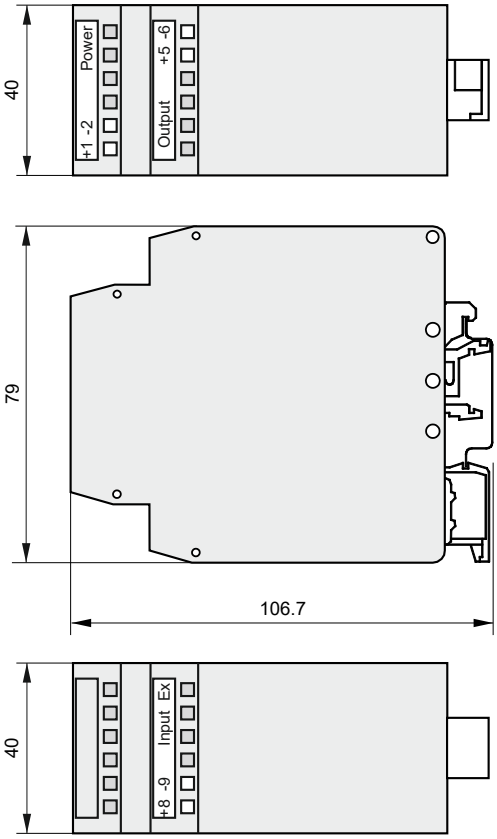

Application and functions

The ZS-31Ex1 power supply and isolator is a partially intrinsically safe device with an external (input) intrinsically safe circuit.

The ZS-31Ex1 is designed to supply power intrinsically safe transmitters used in a hazardous area, with a 4...20 mA signal in a two-wire transmission, and to transform that signal through a galvanic separation circuit into one of the standard signals used in automatic control.

The supply voltage of the intrinsically safe input circuit of the standard version of the ZS-31Ex1 is 25 V DC. At the customer's request this voltage can be altered to 16 or 18 V DC.

The output circuit can be connected to any apparatus with a separated supply voltage of < 250 V (from transformer-based network supplies).

Calibration

The user can adjust the setting of the start-point and width of the range using potentiometers accessible via marked holes in the front panel.

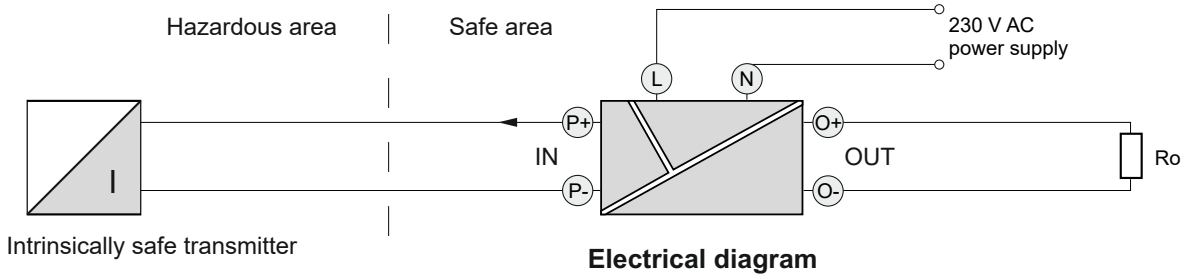

Electrical diagram

Technical parameters

- **Input parameters**

  Input signal from the transmitter 4...20 mA

					Standard version
Supply voltage of the input circuit U_{IN}	15 V	18 V	20 V	22 V	**25 V**
Maximum voltage on the terminals of the input circuit U_0	15,75 V	18,9 V	21 V	23,1 V	**25,5 V**

  Input voltage after loading by the transmitter with output signal 4…20 mA $U_{IN20} = U_{IN}$ [V] · 0,75
  U_{IN} is the supply voltage of the input circuit

  Maximum shorting current of input circuit I_0 = 100 mA

- **Output parameters**

Output signal	Output load resistance
4...20 mA	**500 Ω**
0...20 mA	500 Ω
0...5 mA	2 kΩ
0...5 V, 1...5 V, 0...10 V	10 kΩ

Standard version

- **Galvanic separation**

  IN-OUT optoelectronic
  IN-SUPPLY, OUT-SUPPLY network transformers
  Test voltage between circuits 2,5 kV AC, 50 Hz or equivalent DC

- **Conversion errors**

  Accuracy 0,1%
  Non-linearity ±0.05%
  Effect of temperature fluctuations ≤ ±0,1% / 10°C
  Effect of load resistance fluctuations ≤ ±0,05%
  Effect of supply voltage fluctuations ≤ ±0,1%

- **Dynamic characteristics**

  Time constant c. 0,05 s (by arrangement: 0,1...1 s)

- **Power supply**

  Supply voltage rated: 230 V AC ±10%
  Maximum power ≤ 4 VA

- **Conditions of normal use**

  Ambient temperature 5...60°C
  Relative humidity 30...80%

- **Casing**

  Ingress protection rating IP20

- **Weight** 0,35 kg

Ordering procedure

Standard version (U_{IN} = 25 V, output 4...20 mA): **ZS-31Ex1**

Special version: **ZS-31Ex1 /___/___**

Input circuit voltage

Output signal

Important: For transmitters in version ALW with switched on illumination of display and used internal resistor 250Ω should be specifed model ZS-31Ex/24V/25.2V.

Overvoltage protection circuit
UZ-2

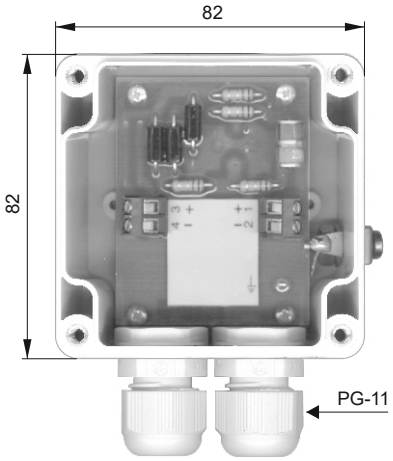

Wall-mounted version

Rail mounted version

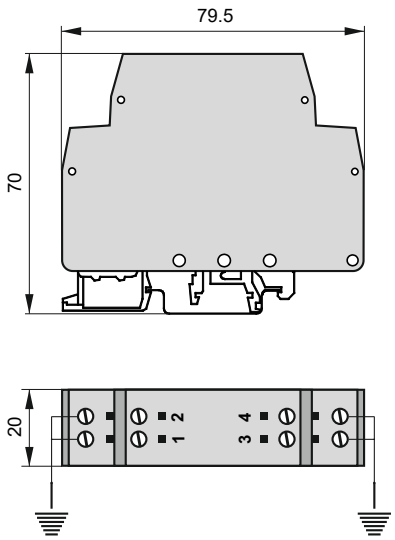

Application

The UZ-2 protection circuit is designed to provide overvoltage protection for measurement transmitters and auxiliary devices. The most common types of overvoltage which cause danger to measuring apparatus are:

- voltage and current pulses in the signal line, caused for example by a break in the induction circuit, the effect of high frequency circuits or high-power energy supply devices;
- overvoltages caused by atmospheric discharge.

Note that the UZ-2 may not be used as a basic lightning protector, but only as additional protection for a measuring device.

The UZ-2 is a type of barrier consisting of diode transiles, resistors and gas arresters.

The barrier provides protection by limiting the size of the voltage which can be applied to the protected device to the voltage of the diode transiles, i.e. approximately 43 V in the case of static overload. Both leads of the signal line are protected independently of each other.

Installation

The device is produced in two versions: a wall-mounted version (N) and rail mounted version (L). It is best to install the device close to the protected apparatus. Electrical connections should be made as shown in the diagram, taking care to ensure proper earthing.

Operating parameters

Maximum working current	150 mA
Maximum working voltage	36,5 V DC
IP 65	

Ordering procedure

Wall-mounted version	**UZ-2/N**
Rail mounted version	**UZ-2/L**

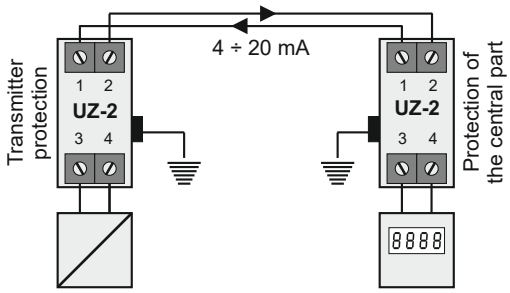

Electrical diagram

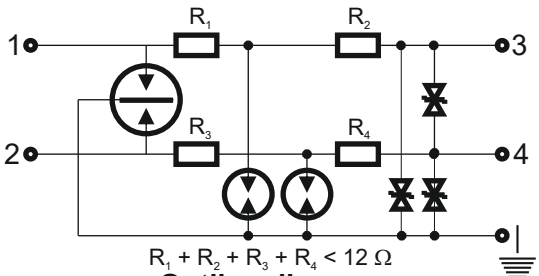

Outline diagram

Chapter VIII
Flow measuring systems

Electromagnetic flowmeter PEM-1000 ..... VIII/ 2

Flange type of nozzle flowmeter ZPK..... VIII/ 6

Welded type of nozzle flowmeter ZPR ..... VIII/ 7

Orifice flowmeter with assembling element ZPS ..... VIII/ 8

Venturi type flowmeter ZPV..... VIII/ 9

Pitot tube flow measurement..... VIII/ 10

APLISENS®

Electromagnetic flowmeter type PEM-1000

- **Nominal size: DN10...1000 / ANSI 0,5...24“**
- **Maximum static pressure 1,6MPa**
- **Accuracy: 0,5% or 0,2%**
- **Analog outputs: 4...20mA,**
- **Communication interface: Modbus RTU / RS 485**
- **Pulse output (uni- or bidirectional) or frequency output**

Application

Electromagnetic flowmeter for bidirectional measurement of liquids with a minimum conductivity of ≥ 5 µS/cm:

- Acid, alkalis
- Paints
- Pastes
- Water, wastewater, etc.

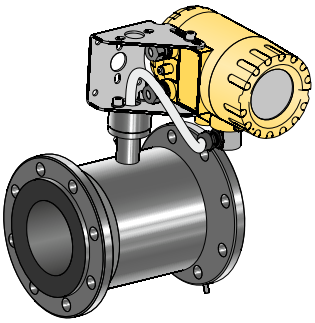

PEM-1000ALW

Measuring principle:

Following Faraday's law of magnetic induction, a voltage is induced in a conductor moving through a magnetic field. In the electromagnetic measuring principle, the flowing medium is the moving conductor. The voltage induced is proportional to the flow velocity and is supplied to the amplifier by means of two measuring electrodes. The flow volume is calculated by means of the pipe cross-sectional area.The DC magnetic field is created through a switched direct current of alternating polarity.

Measuring system

The measuring system consists of a transmitter and a sensor.
Two versions are available:

- Compact version: Transmitter and sensor form a mechanical unit PEM-1000ALW
- Remote version: Sensor is mounted separate from the transmitter PEM-1000NW

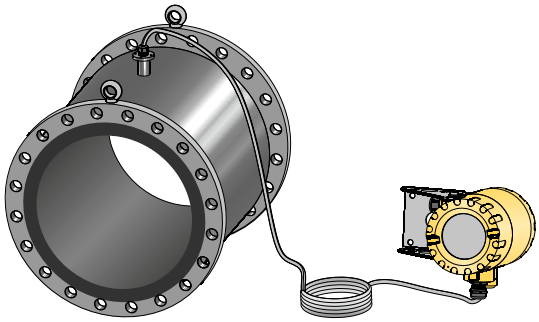

PEM-1000NW

Advantages

- Flexible and clever assembling system
- Easy and fast-moving change from compact to remote version
- Innovative and high-power transmitter for every application
- Robust and resistant cover of sensor and transmitter

Flow value table [m³/h]

DN acc. DIN	Recommended flow values		Factory settings				
	~$Q_{(min)}$	~$Q_{(max)}$	Current output 4...20mA		Pulse output		Cut-off level for small flows (v~0,1 [m/s])
			Measuring range	Flow speed (for URV)	Volume / pulse	Number of pulses / m³	
	[m³/h]	[m³/h]	[m³/h]	[m/s]	[m³/pulse]		[m³/h]
10	0,08	2,8	0÷1	3,54	0,0000025	400000	0,03
15	0,19	6,4	0÷2	3,14	0,000005	200000	0,06
20	0,34	11	0÷4	3,54	0,00001	100000	0,12
25	0,5	18	0÷5	2,83	0,0000125	80000	0,15
32	0,9	29	0÷10	3,45	0,000025	40000	0,3
40	1,4	45	0÷15	3,32	0,00004	25000	0,45
50	2,1	71	0÷20	2,83	0,00005	20000	0,6
65	3,6	119	0÷30	2,51	0,0001	10000	0,9
80	5	181	0÷50	2,76	0,000125	8000	1,5
100	8	283	0÷100	3,54	0,00025	4000	3
125	13	442	0÷150	3,40	0,0004	2500	4,5
150	19	636	0÷200	3,14	0,0005	2000	6
200	34	1131	0÷360	3,18	0,001	1000	10,8
250	53	1767	0÷500	2,83	0,00125	800	15
300	76	2545	0÷760	2,99	0,002	500	22,8
350	104	3464	0÷1000	2,89	0,0025	400	30
400	136	4524	0÷1300	2,87	0,004	250	39
500	212	7069	0÷2000	2,83	0,005	200	60
600	305	10179	0÷3000	2,95	0,008	125	90
800	416	13854	0÷5000	2,76	0,0125	80	120
1000	848	28274	0÷8000	2,83	0,025	40	240

Technical data

Specification for PEM-1000 control unit

Electrical conductivity of the medium	≥ 5µS/cm
Input resistance	≥ $10^{10}\Omega$
Accuracy	±0,5% of reading at 20÷100% $Q_{10m/s}$ special version: ±0,2% of reading at 20÷100% $Q_{10m/s}$ (for reference conditions)*
Low flow rejection	adjustable, any value
Actual flow	both directions (l/s,m^3/h, m^3/s, other)
Totalizer	3 counters: total, positive, negative (m^3, other)
Configuration	LCD display/buttons or Modbus RTU via RS485
Empty pipe detection	cyclic, configurable
Analog output	4÷20mA/500Ω active output (passive output – on request)
Pulse/frequency output	max. 24V/10mA DC 0,1…2000Hz in frequency mode up to 500Hz in pulse mode
2-state output OC	2, open collector, max. 35V DC for each galvanic insulation, reverse polarity protection
Communication output	Modbus RTU/RS 485 galvanic insulation
2-state input	5…35V DC/2mA passive input, galvanic insulation, reverse polarity protection
Power supply	90..260V AC/50Hz/15VA 10…36V DC/15W (reverse polarity protection)
Protection class	IP66 (IP67 on request)
Ambient temperature	-20…60°C
Weight	3,5kg

* Reference conditions according to PN-EN 29104:2003

Specification for PEM-1000 sensor

Nominal size	DN10÷1000 / ANSI 0,5”…24”
Max. static pressure	standard: 1,6MPa (2,5MPa, 4MPa on request)
Process connection	flange DIN, ANSI
Ambient temperature	-20÷60°C
Liner temperature range	Rubber: -5÷90°C Teflon: -25÷90°C
Connection cable	standard: 8m (other on request)
Electrodes material	316L (Hastelloy/Tantalum)
Flowtube material	321
Liner	Hard rubber DN40÷1000 Teflon PTFE DN10÷500
Casing and flange material	standard : carbon steel
Rustproofing	paint
Excitation coils supply	from the transmitter
Excitation of coils isolation class	E
Protection class	standard: IP67, (IP68 on request)
Measuring principle	electromagnetic
Accessories	grounding rings

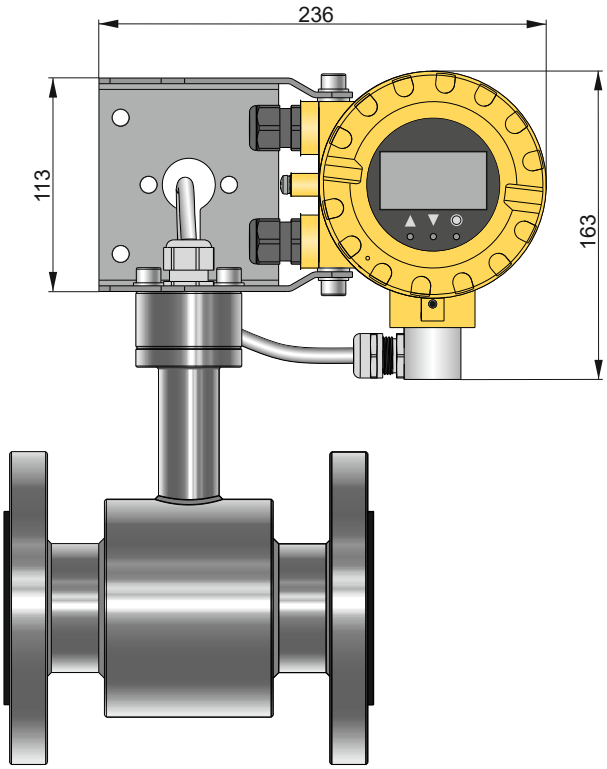

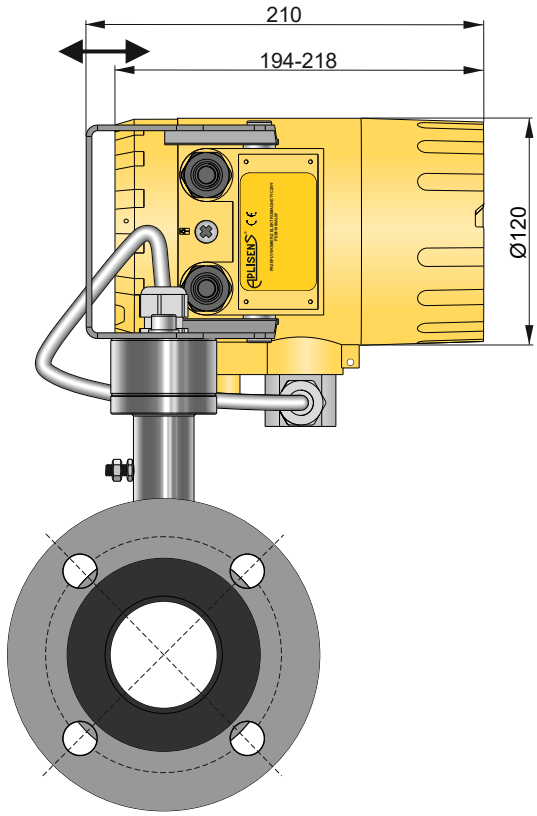

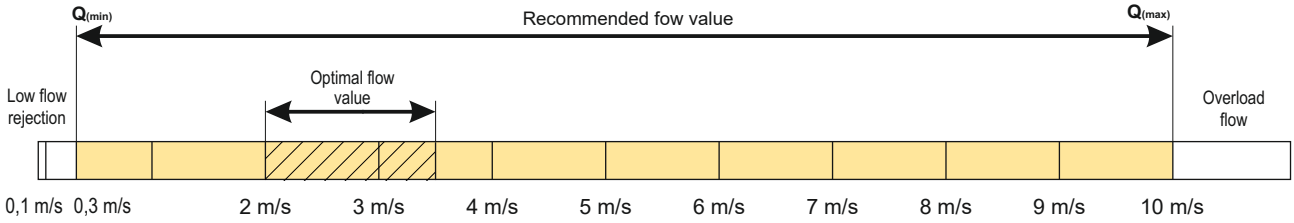

Dimensions of sensor

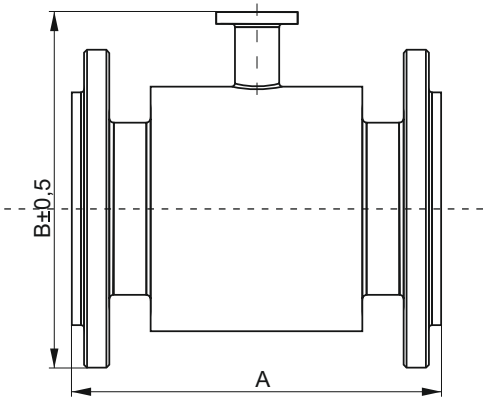

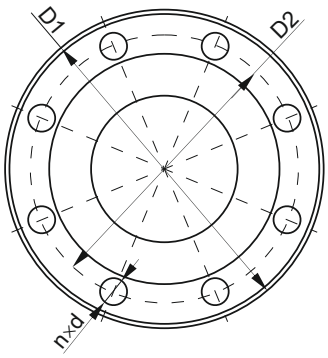

DN 10 – DN 150 A ± 5 mm

DN 200 – DN 1000 A ± 10 mm

		Dimensions [mm]						Weight
DN	PN	A	B	D1	D2	d	n	kg
10	16	150 or 200	153	90	60	14	4	5
15			155	95	65	14	4	5
20			160	105	75	14	4	6
25			167	115	85	14	4	7
32			180	140	100	18	4	8
40			185	150	110	18	4	8
50		200	191	165	125	18	4	9
65			209	185	145	18	4	11
80			224	200	160	18	8	13
100		250	245	220	180	18	8	16
125			276	250	210	18	8	21
150		300	305	285	240	22	8	26
200		350	375	340	295	22	12	36
250		400	430	405	355	26	12	60
300		500	487	460	410	26	12	80
350			542	520	470	26	16	90
400		600	615	580	525	30	16	120
450			657	640	585	30	20	130
500			750	715	650	33	20	150
600			870	840	770	36	20	240
700		700	927	910	840	36	24	340
800		800	1050	1025	950	39	24	400
900		900	1145	1125	1050	39	28	480
1000		1000	1285	1255	1170	42	28	600

		Dimensions [mm]						Weight
ANSI	lbs	A	B	D1	D2	d	n	kg
1/2”	150	200	155	88,9	60,45	15,7	4	5
3/4"			160	98,6	69,85	15,7	4	6
1”			167	108	79,25	15,7	4	7
1 1/4"			180	117,3	88,9	15,7	4	8
1 1/2"			185	127	98,6	15,7	4	8
2”			191	152,4	120,7	19,1	4	9
2 1/2"			209	177,8	139,7	19,1	4	11
3”			224	190,5	152,4	19,1	4	13
4”		250	245	228,6	190,5	19,1	8	16
5”			276	254	215,9	22,4	8	21
6”		300	305	279,4	241,3	22,4	8	26
8”		350	375	342,9	298,5	22,4	8	36
10”		450	430	406,4	362	25,4	12	60
12”		500	487	482,6	431,8	25,4	12	80
14”		550	542	533,4	476,3	28,4	12	90
16”		600	615	596,9	539,8	28,4	16	120
18”			657	635	577,9	31,75	16	130
20”			750	698,5	635	31,75	20	150
24”			870	812,8	749,3	35,1	20	240

Electrical diagrams

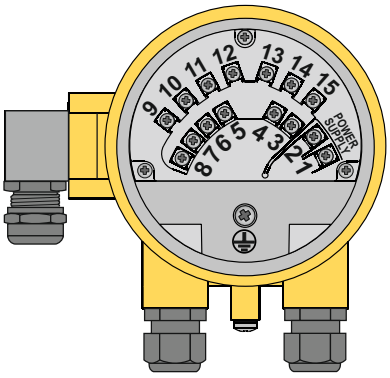

	Terminal	Description		
Power supply	1	90...260V AC	(-)	10...36V DC (on request)
	2		(+)	
2-state output 1	3	reverse polarity protection, galvanic insulation, passive		
	4			
Pulse/frequency output	5	reverse polarity protection, galvanic insulation, passive		
	6			
Current output 4÷20 mA	7	(+)	active (passive on request)	
	8	(-)		
Communication	9	RS 485 A		
	10	RS 485 B		
	11	RS 485 GND / shield		
2-state input (passive)	12	reverse polarity protection, galvanic insulation		
	13			
2-state output 2	14	reverse polarity protection, galvanic insulation, passive		
	15			

Examples of installation

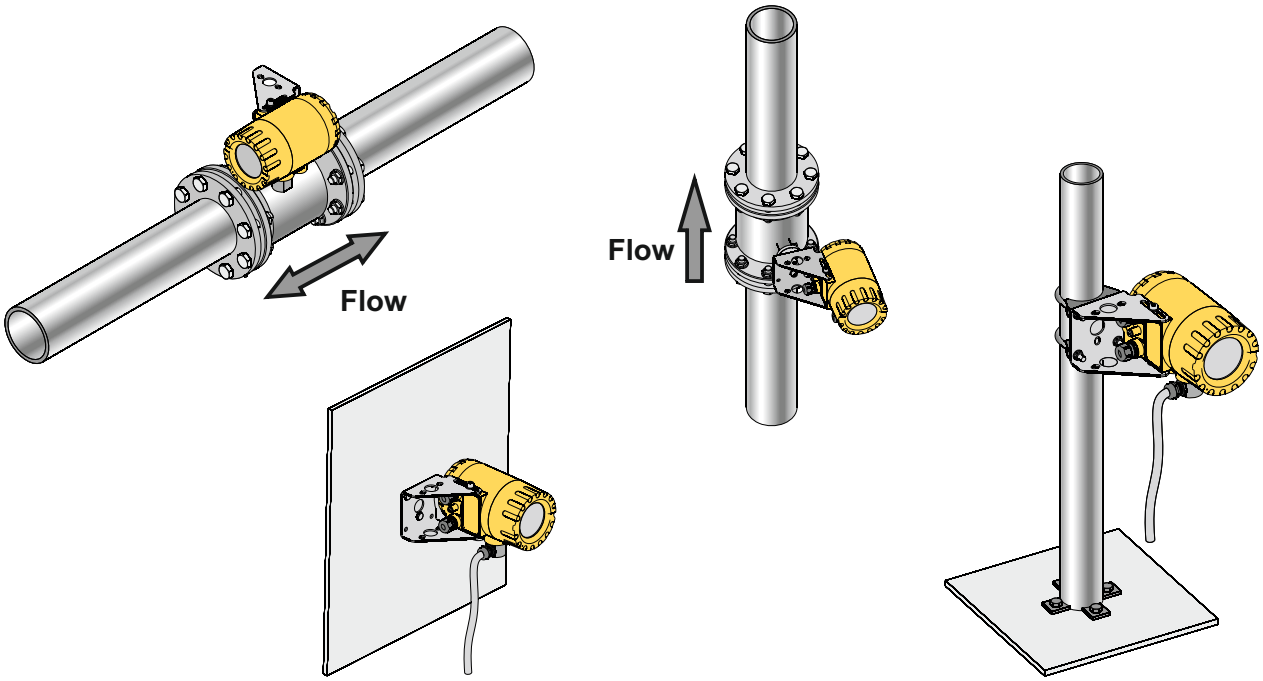

Ordering procedure

PEM-1000ALW /___-___/___/___/___/___/___

PEM-1000NW /___-___/___/___/___/___/___/___/ L =___ m

Nominal diameter: **DN10...1000**
3/8"...40"

Pressure rating: **PN16, ANSI150**

Electrodes material: **316L, Hastelloy, Tantalum**

Liner material: **hard rubber, Teflon, ECTFE**

Cable length (standard L=8m)

Special version: **IP68, IP67, Q_{max}, PZH**

Power supply: **90...260 V AC, 10...36 V DC**

Communication: **Modbus RTU/RS 485**

Special versions

IP68 – sensor protection class IP68
IP67 – transmitter protection class IP67

Qmax – non-standard value of Qmax.
PZH – approval for contact with potable water

Flange type of nozzle flowmeter ZPK

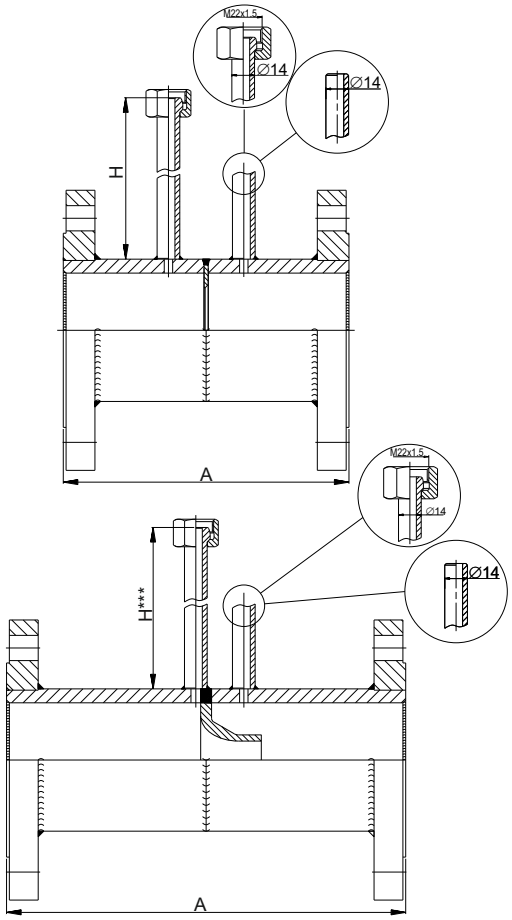

Technical data:

-nominal pressure PN6÷PN100
-size of flowmeter DN25÷DN800
-material of flow element (orifice, nozzle):
stainless steel 1.4301
-material of construction elements:
carbon steel
austenic steel
stainless steel
-temperature up to 500°C
-material certification
-calculation acc. to PN-EN ISO 5167, ISO/TR 15377

Application:

Nozzle flowmeter is used for flow measurement of liquid medium in close pipeline.
An orifice plate installed in line creates a pressure drop. This difference of pressure is measured via impulse line by differential pressure transmitter. The relationship between the rate of flow and pressure drop is very well known and allows to easily convert measured pressure difference to flow value.
Flowmeters without correction are used for mediums with constant values of pressure and temperature.
For custody transfer measurement it's recommend to use differential pressure transmitters without SQRT characteristic and correction from changes of medium's pressure and temperature. This kind of measurement have to be calculated in dedicated flow counters.
Characteristic:
- high accuracy of measurement in wide range of flow
- resistant for aggressive media
- work in wide range of temp. and pressure

DN	25	32	40	50	65	80	100	125	150	200	250	300	350	400	500	600	800
A	150			200			250		300	350	400	500		600			800

Version with straight sections and flanges for screwing

Ordering procedure:

ZPK – K – DN100 – PN16 – P265GH – 1.4301 – M22x1.5

- M22x1.5: Type of mounting elements: ∅**14**, **M22x1,5**, other
- 1.4301: Flowelement material: **304** or other
- P265GH: Material of pipe and flange: **P265GH**, **304** or other
- PN16: Nominal pressure PN
- DN100: Size DN
- K: Type of flowelement: **K** - orifice, **D** - nozzle, **Kkw** - square orifice
- ZPK: Version of flowmeter

 PandID®B.V. | t: +31 174 280 371 |e: info@pandid.nl | i: www.pandid.nl | www.lineblind.eu

Welded type of nozzle flowmeter ZPR

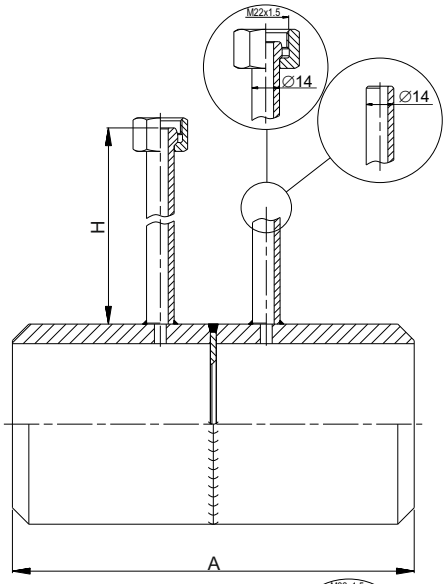

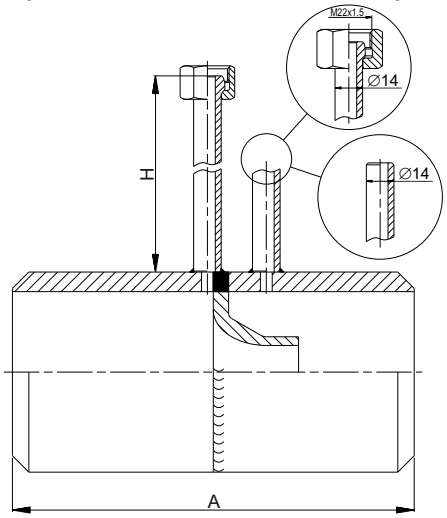

Technical data:

-nominal pressure PN6÷PN100
-size of flowmeter DN25÷DN800
-material of flow element (orifice, nozzle):
stainless steel 1.4301
-material of construction elements:
carbon steel
austenic steel
stainless steel
-temperature up to 500°C
-material certification
-calculation acc. to PN-EN ISO 5167, ISO/TR 15377

Application:

Nozzle flowmeter is used for flow measurement of liquid medium in close pipeline.
An orifice plate installed in line creates a pressure drop. This difference of pressure is measured via impulse line by differential pressure transmitter. The relationship between the rate of flow and pressure drop is very well known and allows to easily convert measured pressure difference to flow value.
Flowmeters without correction are used for mediums with constant values of pressure and temperature.
For custody transfer measurement it's recommend to use differential pressure transmitters without SQRT characteristic and correction from changes of medium's pressure and temperature. This kind of measurement have to be calculated in dedicated flow counters.
Characteristic:
- high accuracy of measurement in wide range of flow
- resistant for aggressive media
- work in wide range of temp. and pressure

Ordering procedure:

ZPR – K – DN100 – PN16 – P265GH – 1.4301 – M22x1.5 – 500 – 80

- 80: Size H
- 500: Size A
- M22x1.5: Type of mounting elements: ∅**14**, **M22x1,5**, other
- 1.4301: Flowelement material: **304** or other
- P265GH: Material of pipe and flange: **P265GH** or other
- PN16: Nominal pressure PN
- DN100: Size DN
- K: Type of flowelement: **K** - orifice, **D** - nozzle, **Kkw** - square orifice
- ZPR: Version of flowmeter

Orifice flowmeter with assembling element ZPS

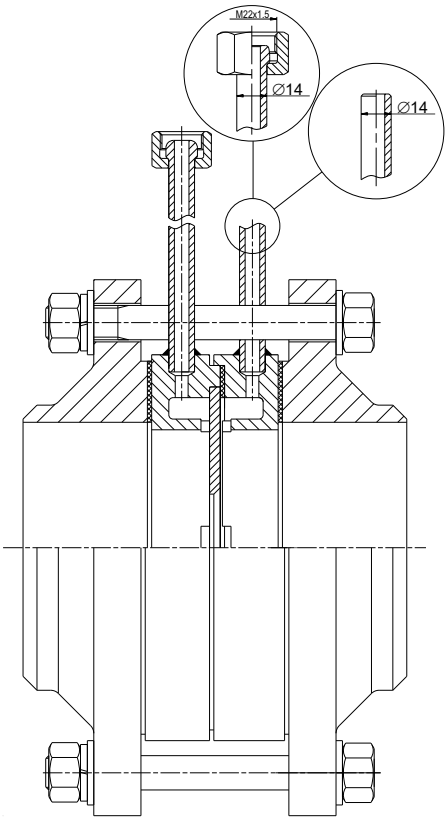

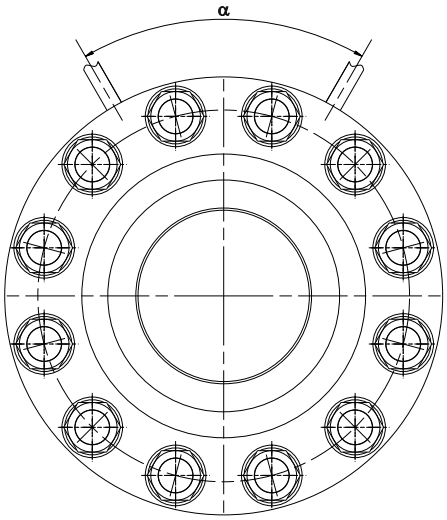

Technical data:

-nominal pressure PN6÷PN100
-size of flowmeter DN25÷DN800
-material of flow element:
stainless steel 1.4301
-material of construction elements:
carbon steel
austenic steel
stainless steel
-temperature up to 500°C
-material certification
-calculation acc. to PN-EN ISO 5167, ISO/TR 15377

DN	angle spacing between measuring points α							
	medium, gas							Steam
	nominal pressure							PN
	PN6	PN10	PN16	PN25	PN40	PN63	PN100	6, 10, 16, 25 40, 63, 100
25÷50	135°	135°	135°	135°	135°	135°	135°	0°, 90°, 180°
65				90°	90°	90°	90°	
80	90°	90°	90°					
100								
125								
150							60°	
200			60°	60°	60°	60°		
≥250	60°	60°	60°					

Application:

Measurement based on orifice plate with differential pressure trassmitter is most widely used type of flow measurement. It can be used in flow measurement of steam, water and gases.

The biggest advantages of this soultion are:
- high accuracy in wide measuring ranges
- applicable to measure flow of neutral and agressive mediums
- easy calibration

Ordering procedure:

ZPS – K – DN100 – PN16 – P265GH – 1.4301 – 90° – M22x1.5

- M22x1.5: Type of mounting elements: ∅**14**, **M22x1,5**, other
- 90°: Angle spacing between measuring points
- 1.4301: Flowelement material: **304** or other
- P265GH: Material of casing and flange
- PN16: Nominal pressure PN
- DN100: Size DN
- K: Type of flowelement: **K** - orifice, **Kkw** - square orifice
- ZPS: Version of flowmeter

PandID®B.V. | t: +31 174 280 371 |e: info@pandid.nl | i: www.pandid.nl | www.lineblind.eu

Venturi type flowmeter ZPV

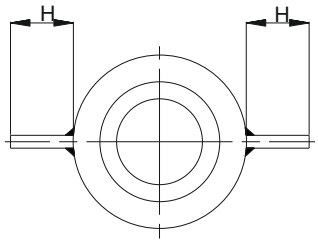

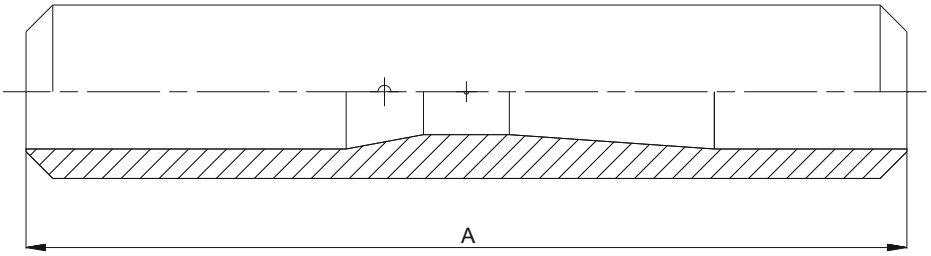

Technical data:

-nominal pressure PN6÷PN160
-size of flowmeter DN65÷DN800
-material of flow element (orifice, nozzle):
stainless steel 1.4301
-material of construction elements:
carbon steel
austenic steel
stainless steel
-temperature up to 600°C
-material certification
-calculation acc. to PN-EN ISO 5167

Application:

Venturi flowmeter is used for flow measurement of liquid medium in close pipeline. An orifice plate installed in line creates a pressure drop. This difference of pressure is measured via impulse line by differential pressure transmitter. The relationship between the rate of flow and pressure drop is very well known and allows to easily convert measured pressure difference to flow value.
Flowmeters without correction are used for mediums with constant values of pressure and temperature.
For custody transfer measurement it's recommend to use differential pressure transmitters without SQRT characteristic and correction from changes of medium's pressure and temperature. This kind of measurement have to be calculated in dedicated flow counters.

Characteristic:
- high accuracy of measurement in wide range of flow
- resistant for aggressive media
- work in wide range of temp. and pressure

Ordering procedure:

ZPV – Dn100 – PN63 – P91

- P91: Material of measuring element
- PN63: Nominal pressure PN
- Dn100: Size DN
- ZPV: Version of flowmeter

Pitot Tube Flow Sensor Type PRP

- ✓ **Long-term accuracy**
- ✓ **Low installation costs**
- ✓ **Short up/down straight pipe run requireme**
- ✓ **Low permanent pressure loss**
- ✓ **Cost effective**
- ✓ **Maintenance-free**
- ✓ **Bi-directional flow measurement**

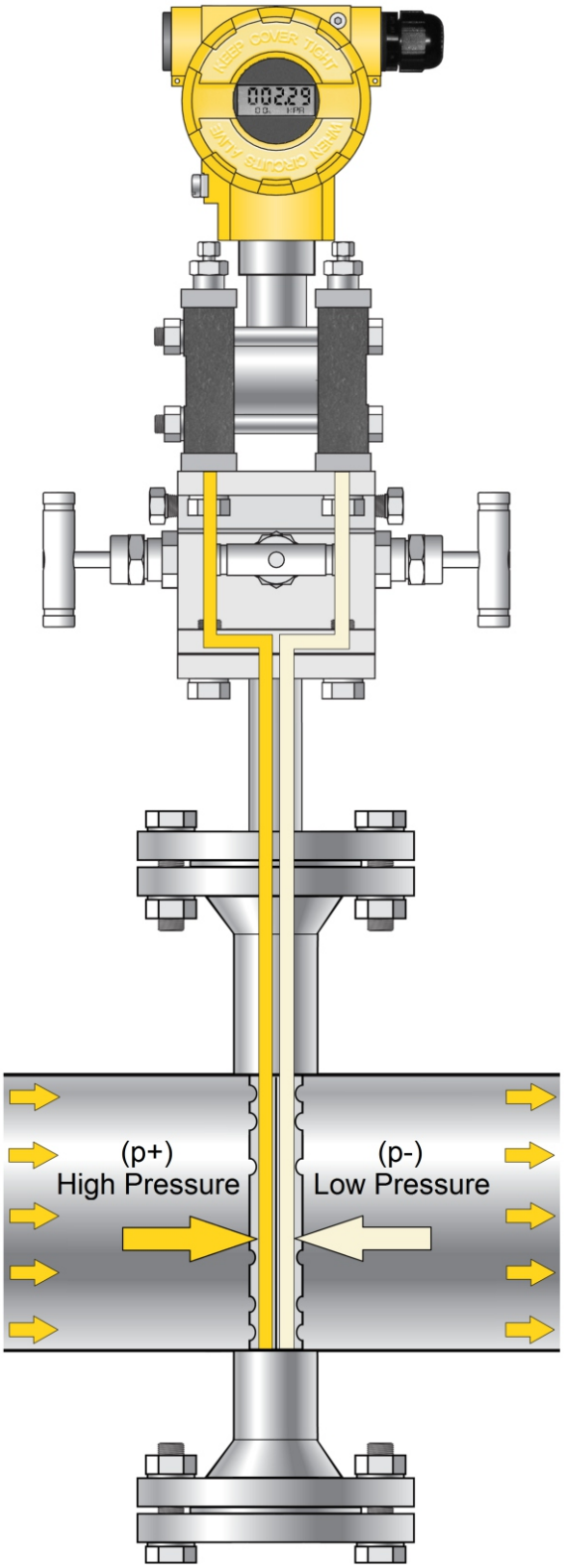

Fig. 1
PRP-F22 Sensor with flanged end support

Measuring Principle

The PRP Sensor is a Pitot tube based flow Sensor which belongs to the family of primary flow Elements! These devices measures the flow in pipes and ducts by using the differential pressure principle based on the basics of Bernoulli. The flow calculation is similar the calculation according to EN ISO 5167-1. A rectangular design of the PRP sensor profile is divided diagonally into two symmetrically constructed chambers with sensing holes (dp-tappings). The chamber facing to the upstream generate a higher pressure (p+) and the chamber in the downstream a lower pressure (p-). Several dp-tappings along the sensor profile provide a steady averaging of the flow velocity. This facilitates exact metering even with irregular flow profiles. Each chamber is connected to the corresponding side of a differential pressure transmitter. The value of the differential pressure is the measure to determine the flow. With increasing flow the dp increases. A differential transmitter converts the dp into an electrical signal (i.e. 4-20mA) that is transmitted to the process control system..

Performance

Accuracy	1,0% of flow
Repeatability	± 0,1 % of actual value
Measuring relation	10:1

Technical specification:

- Pipe diameters: 40 to 2500 mm
- Operating pressure: up to PN100
- Operating temperature: -50° C to +450°C
- Sensor material : Stainless steel M.-Nr. 1.4571 (316Ti)
- Differential pressure ports: ″ ″ NPT, R ″ ″ flange plate
- Process connection: welded coupling, flanged version (DIN, ANSI)
- End support: Pipe thread with cap, flanged version (DIN, ANSI)

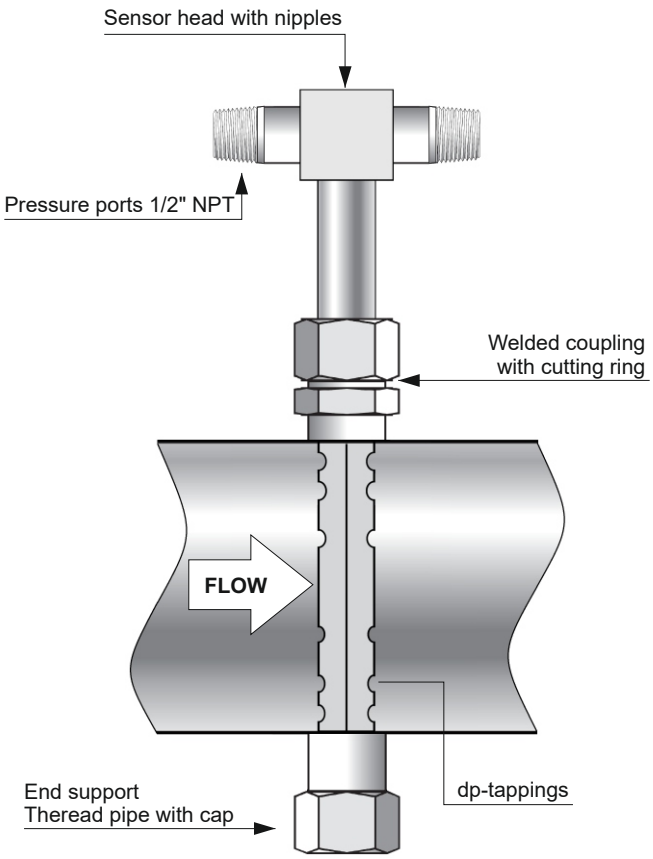

Fig. 2
PRP-M22 Sensor

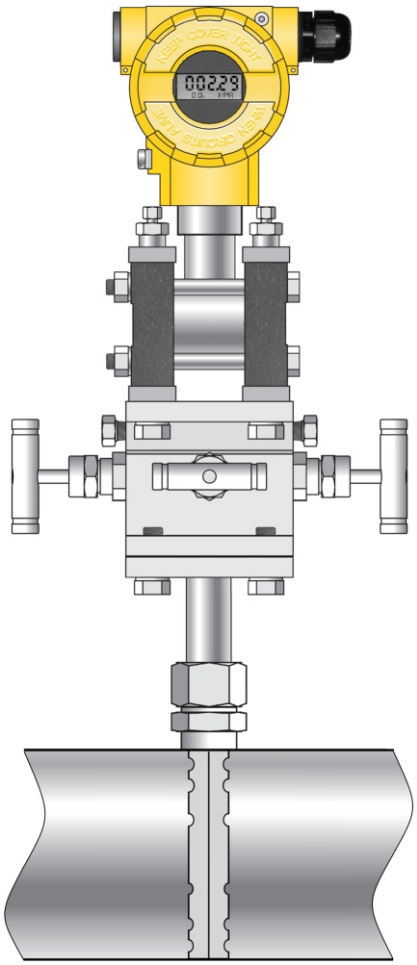

Fig. 3
PRP-M10 Sensor with flange plate
for direct transmitter mounting

For technical offer please fulfill form available on our website.
The following information will be needed:

- Medium
- Density
- Operating pressure
- Operating temperature
- Flowrate
- Process connection
- Pipe diameter and wall thickness
- Insulation thickness
- Pipe orientation
- Direct mount / remote mount transmitter

Notes

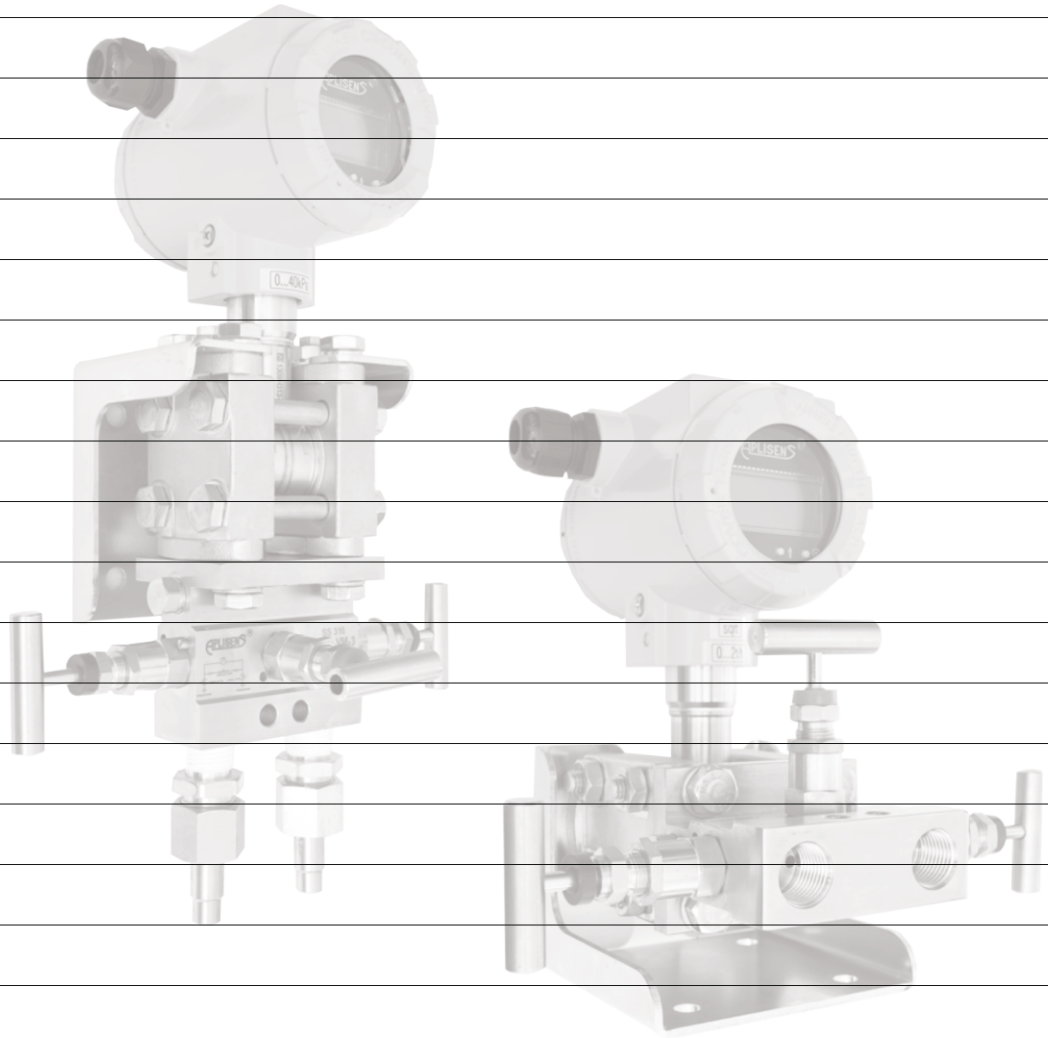

Chapter IX

Temperature transmitters

Smart temperature transmitter APT-2000ALW ..... IX/ 2

Smart temperature transmitter LI-24ALW ..... IX/ 5

Temperature transmitter PT-25..... IX /9

Smart temperature transmitters LI-24L..... IX/ 10

Temperature transmitter ATL ..... IX/ 11

Temperature transmitter LI-24G ..... IX/ 12

Temperature transmitter AT-2 ..... IX/ 13

Temperature transmitter ATX-2 ..... IX/ 14

Temperature transmitter GI-22-2, GIX-22-2..... IX/ 16

Smart temperature transmitter
APT-2000ALW

HART COMMUNICATION PROTOCOL

- ✓ **4…20 mA output signal + HART protocol**
- ✓ **Programmable range, zero shift, characteristic and damping ratio with local panel keys**
- ✓ **ATEX Intrinsic safety , ATEX Explosion proof**
- ✓ **Resistant or thermocouple measuring element**
- ✓ **MID (Measuring Instruments Directive) – certificate acc. to 2004/22/WE directive and OIML R140:2007 recommendations.**

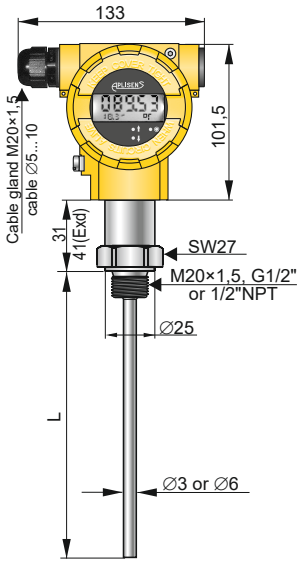

APT-2000ALW/GB

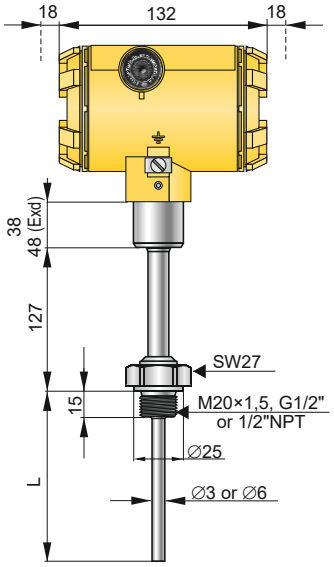

APT-2000ALW/GN

Thermowell

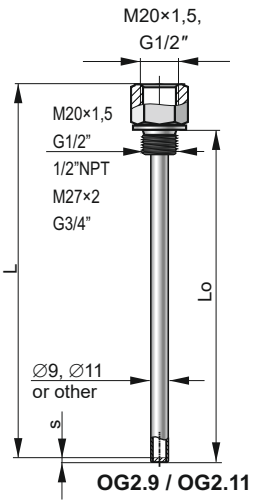

OG2.9 / OG2.11

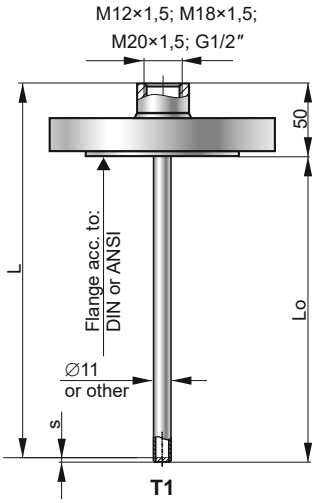

T1

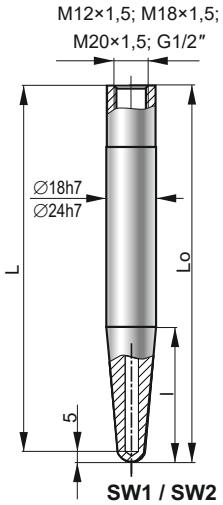

SW1 / SW2

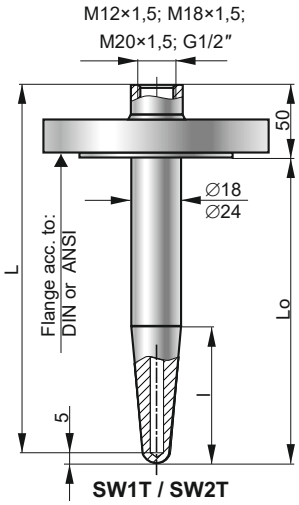

SW1T / SW2T

Technical data

Metrological parameters

Error (digital value)
± (0,2 + 0,002·|t|)°C for Pt100 sensor
± 1,5°C for TC type K sensor and t ≤ 375°C
± (0,004·t)°C for TC type K sensor and t > 375°C

Additional error for analog output ±0,04%·z
where:
|t| – absolute value of the measured temperature °C
t - value of the measured temperature °C
z – transmitter setting range °C

Measuring range

Sensor type	Min set range	Nominal range
Pt100	10°C	-200…550°C*
K	10°C	-40…550°C

* for GB version -50…150°C

Electrical parameters

Powerr supply 12...55 V DC (Ex 13,5...28 V)
Additional voltage drop when display illumination switched on 3 V

Output signal 4...20 mA + Hart protocol

Resistance required for communication (HART) min. 240Ω

Load resistance $R[\Omega] = \frac{U_{ZAS}[V] - 12V\,*}{0{,}0225A}$

* – 15 V when display illumination switched on

Operating conditions

Ambient temperature -40...85°C
for version with Ex ia -40...80°C
for version with Ex d -40…75°C

Min. immersion length **L=100mm**

Materials

Casing Aluminum, 316Lss- special version
Sensor material 321ss
Thermowell according to table page.

Communication and configuration

The communication standard for data interchange with the transmitter is the Hart protocol.
Communication with the transmitter is carried out with:
– a KAP-03, KAP-03Ex communicator,
– some other Hart type communicators,
– a PC using an HART/USB converter and Raport 2 configuration software.
The data interchange with the transmitter enables the users to:

- identify the transmitter;
- configure the output parameters:
- read the currently measured temperature value of the output current and the percentage output control level;
- force an output current with a set value;
- calibrate the transmitter in relation to a model temperature.

Standard thermowell data

Thermowell type		Standard dimensions of thermowell						Thermowell material	Available process connection	
		∅[mm]		L[mm]		l[mm]				
OG2.9		9x1		100, 160, 250, 400		-		316Lss	M20x1,5; G1/2"; 1/2"NPT	
OG2.11		11x2		100, 160, 250, 400		-		316Lss	M20x1,5; G1/2"; 1/2"NPT	
T1		11x2		100, 160, 250, 400		-		316Lss	Flange according to DIN and ANSI	
SW1	SW2	18h7	24h7	100 140 200	140 200	35 65 65	65 65	15HM, 10H2M 316Lss	-	
SW1T	SW2T	18h7	24h7	100 140 200	140 200	35 65 65	65 65	15HM, 10H2M 316Lss	Flange according to DIN and ANSI	
SW1G	SW2G	18h7	24h7	100 140 200	140 200	35 65 65	65 65	15HM, 10H2M 316Lss	M20x1,5, G1/2"	M27x1,5, G3/4"

Ordering procedure

APT-2000ALW/___/___/___/___/ L = ... mm /___/___÷___°C/___/___

Special version:
Exia - ATEX certificate
Ex II 1/2G Ex ia IIC T4/T5/T6 Ga/Gb

Exia(Da) - ATEX certificate
Ex II 1/2G Ex ia IIC T4/T5/T6 Ga/Gb
II 1D Ex ia IIC T105ºC Da
I M1 Ex ia I Ma (version with SS housing)

Exd - ATEX certificate
Ex II 1/2G Ex ia/d IIC T* Ga/Gb
II 1/2D Ex ia/t IIIC T* Da/Db
I M2 Exd ia I Mb (version with SS housing)
T* - temperature class transmitter (for gas)
or maximum surface teperature (for dust)

SS - Housing material 316SS
IP67, IP66/67

Version: **GB, GN**

Thermowell type: according to table

Type of thread of flange connection:
M20×1,5; G1/2"; 1/2"NPT or flange

Immersion length

Type of measuring element: **Pt100, K**

Set measuring range

Alarm signal: 3,8 or 23 mA

Elcetrical connection: **without marking** (M20x1,5) or **US** (1/2"NPTF)

SMART TEMPERATURE TRANSMITTER APT-2000ALW with MID

Application

Smart temperature transmitters APT-2000ALW MID is applicable to the measurement of the temperature in application designed according to directive 2004/22/WE (MID), harmonized standard PN-EN12405-1:2005 + A2:2010 and recommendation OIML R140:2007. Device subcomponent suitable for custody transfer measurement of gas with MID approval. Mechanical construction and installation of the transmitter enclosure shall comply with the transmitter APT-2000ALW are described on page IX/ 2, IX/ 3 of catalogue. Transmitter due to factory blockade of transmitter's configuration cannot be configurable by user. Electrical connection of the transmitter is according to drawing on page IX/ 3. Available are only terminals SIGNAL + and SIGNAL -. Temperature transmitter APT-2000ALW MID are produce with GB type of sensor and with resistant sensor Pt100.

Metrological parameters

Max. permissible error according to EN12405-1
(calculated in relation to the measured value)

- in reference conditions 20±3°C(±1 during the measurement)	≤ 0,1%
- nominal operating conditions	< 0,2%
special version	< 0,1%
Long-term stability	< 0,2% / 5 years
Operating temperature range	-25...55°C
Immersion length	150...290mm
Power supply	Exia: 13,5...28VDC Exd: 13,5...45VDC

MID Parts Cerfificate No. 28/12
Exia: Ex II 1/2G Ex ia IIC T4/T5/T6 Ga/Gb
Exd: Ex II 1/2G Ex ia/d IIC T* Ga

Measuring range

Measuring range:	-20...60°C

Ordering procedure

APT-2000ALW/MID/___/___/ L = ... mm

Special version:
Exia - Intrinsic safety version (ATEX)
Exd - Explodion proof version (ATEX)
SS - Housing material 316SS

Process connection type: **M20x1,5 , G1/2"**

Immersion length

Smart temperature transmitter
LI-24ALW

- ✓ **Output signal 4…20mA with Hart protocol**
- ✓ **Galvanic insulation (In, Out)**
- ✓ **Programmable sensor type**
- ✓ **Programmable measuring range**
- ✓ **Thermoresistance line compensation**
- ✓ **Compensation of thermocouple cold junction**
- ✓ **Autodiagnostic system**
- ✓ **Intrinsic safety certificate (ATEX, IECEx)**
- ✓ **Explosion proof certificate (ATEX, IECEx)**

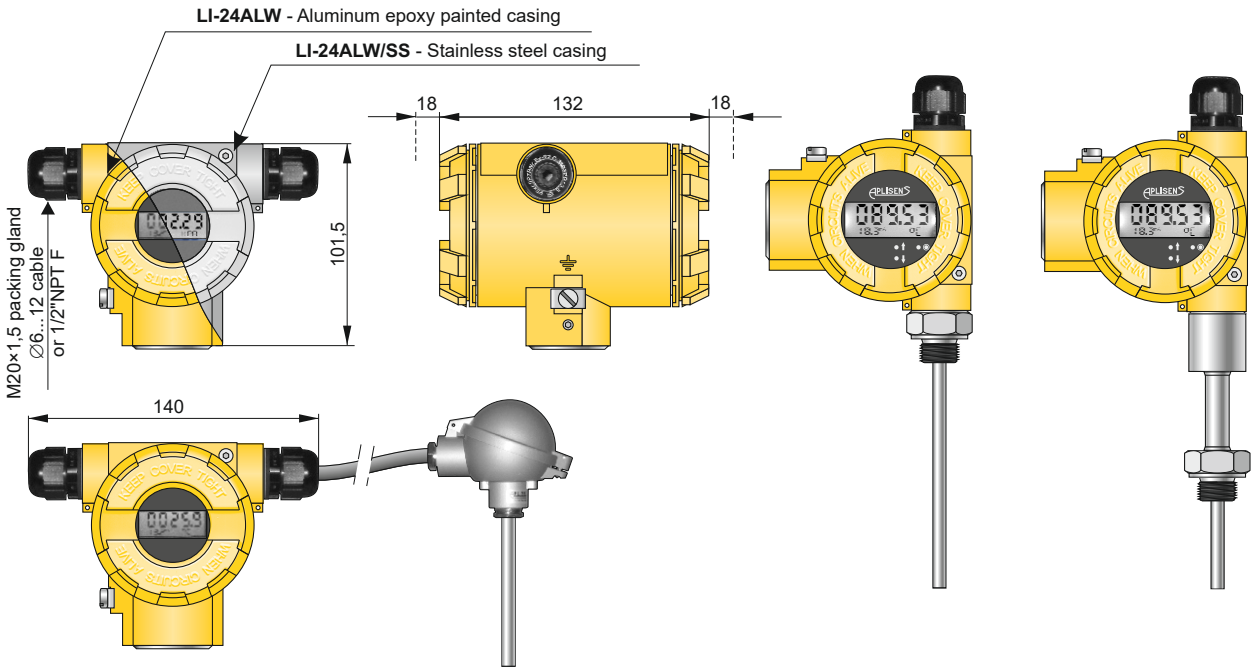

LI-24ALW with remote mounted temperature sensor

LI-24ALW with direct mounted temperature sensor

Application and function

The temperature transmitter LI-24ALW is applicable to converting resistance of temperature or voltage of thermocouple sensor to standard current signal 4-20mA. The transmitter has two separate channels enabling measurement of temperature difference, averange, averange with redundancy, max. or min. temperature. Transmitter has compensation of ambient temparature influence and compensation of thermocouple cold junction using internal/external (Pt100) sensor or constant temperature. Most of parameters such as: sensor type, measuring range, current alarm signal when electric circuit is broken, output characteristic correction, user characteristic (60 points) are programmed using PC with HART/USB converter and Aplisens RAPORT 2 configuration software. For request Aplisens can set temperature transmitter parameters like measuring range, type of sensor. Their values are printed on label. Transmitter LI-24/ALW is designed for field use. LI-24ALW can be used with temprature sensors mounted directly in transmitter's casing or with external sensors connected with cable.

Technical data

Input signal	K, J,S,B,N,T, R, E, voltage Pt100,Ni100 resistance
Limit process	-10mV< E<100mV or -100mV< E<1000mV 0Ω<R<400Ω or 0Ω<R<2000Ω
Min. measuring range	10mV or 10Ω or 10K
Output signal	4 - 20 mA + Hart
Power supply	13,5…55 VDC (Ex 13,5..30 VDC) when display illumination switched on 16,5…55 VDC (Ex 16,5..30 VDC)
Max. wires resistance	500Ω
Alarm signal	3,75mA / 21,5mA (NORMAL) or 3,6 mA / 21 mA (NAMUR NE89) or setting by user
Sensor current	0,42mA
Galvanic insulation	Optoelectrical
Accuracy	acc. to below table
Time constant	0,3s
Additional electronic damping	0..30s
Ambient temperature	-40…+80°C (Ex -40…+75°C)

Electrical diagrams

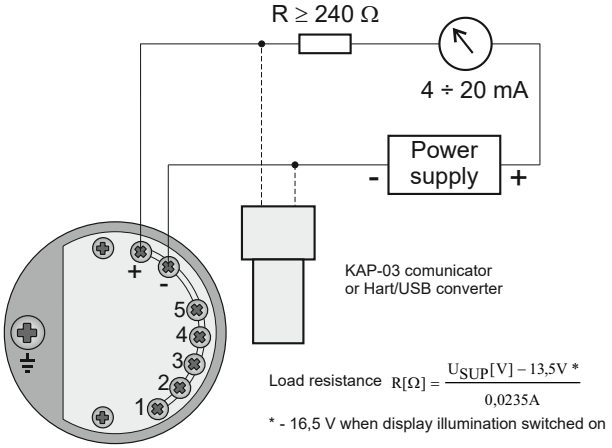

Load resistance $R[\Omega] = \frac{U_{SUP}[V] - 13{,}5V\ *}{0{,}0235A}$

* - 16,5 V when display illumination switched on

Electrical diagrams

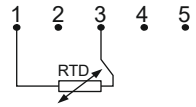

RTD
2-wires connection

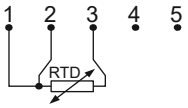

RTD
3-wires connection

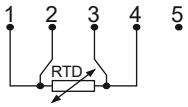

RTD
4-wires connection

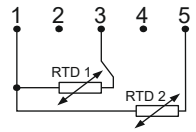

2 × RTD
2-wires connection

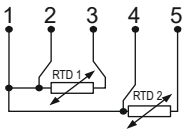

2 × RTD
3-wires connection

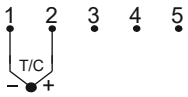

Thermocouple

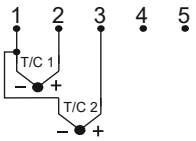

2 x Thermocouple

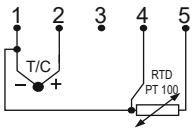

Thermocouple
with external
CJC

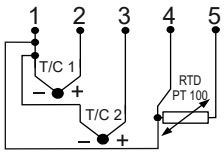

2 x Thermocouple
with external
CJC

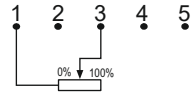

Potentiometer
2-wires connection

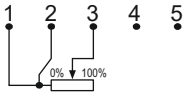

Potentiometer
3-wires connection

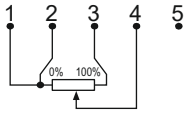

Potentiometer
4-wires connection

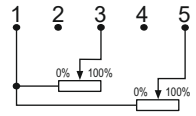

2 × Potentiometer
2-wires connection

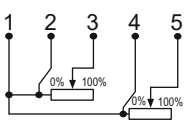

2 × Potentiometer
3-wires connection

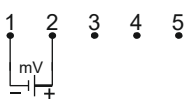

Voltage source

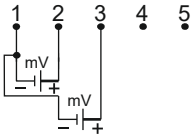

2 x Voltage source

PandID®B.V. | t: +31 174 280 371 |e: info@pandid.nl | i: www.pandid.nl | www.lineblind.eu

Type of input signals and metrological parameters

RTD sensor connected with 2, 3 or 4 wires

Input – RTD

Thermal resistance sensors	2, 3 or 4 wires connection
Sensor current	~420μA
Maximum wires resistance	25Ω
Minimum range	10 °C

Sensor type	Standard	Basic range	Min. range span	Processing error Δp	Temperature processing error Δtp	Analogue output error
		°C	°C	K	K/K	%
1	2	3	4	5	6	7
Pt10 (α=0.003850)	EN 60751+A2, IEC751, DIN43760, JISC 1604-97, BS 1904	-200÷850	10	±0.8	±0.035	Analogue output error is 0.05% FSO (Full Scale Output) over the operating temperature range.
Pt50 (α=0.003850)		-200÷850	10	±0.2	±0.0070	
Pt100 (α=0.003850)		-200÷850	10	±0.07	±0.0035	
Pt200 (α=0.003850)		-200÷850	10	±0.2	±0.0020	
Pt500 (α=0.003850)		-200÷850	10	±0.05	±0.0007	
Pt1000 (α=0.003850)		-200÷266	10	±0.03	±0.0003	
Pt 98 (α=0.003923)	SAMA RC-4-1966	-200÷650	10	±0.07	±0.0035	
Ni100 (W100=1.617)	PN-83/M-53952	-60 ÷ 180	10	±0.07	±0.0030	
Cu100 (W100=1.426)		-50 ÷ 180	10	±0.07	±0.0030	
Pt10 (α=0.003916)	JIS C1604-81	-200÷630	10	±0.8	±0.035	
Pt50 (α=0.003916)		-200÷630	10	±0.2	±0.0070	
Pt100 (α=0.003916)		-200÷630	10	±0.07	±0.0035	
Pt10 (W100=1.3910)	GOST 6651-94	-200÷1100	10	±0.8	±0.035	
Pt50 (W100=1.3910)		-200÷1100	10	±0.2	±0.0070	
Pt100 (W100=1.3910)		-200÷1100	10	±0.07	±0.0035	
Pt500 (W100=1.3910)		-200÷1100	10	±0.05	±0.00070	
Cu50 (W100=1.426)		-50÷200	10	±0.2	±0.0070	
Cu100 (W100=1.426)		-50÷200	10	±0.07	±0.0030	
Cu50 (W100=1.428)		-185÷200	10	±0.2	±0.0070	
Cu100 (W100=1.428)		-185÷200	10	±0.07	±0.0030	
Ni100 (W100=1.617)		-60÷180	10	±0.07	±0.0030	

Resistance (resistor, potentiometer)

		Ω	Ω	mΩ	mΩ/K	As above
Measuring range No.1		0…400	10	±30	±2	
Measuring range No.2		0…2000	10	±120	±2	
1	2	3	4	5	6	7

Thermocouples

Input – Thermocouples

Input impedance	>10MΩ
Maximum wires resistance	500Ω (wires + thermocouple)
Cold junctions compensation	internal sensor, external sensor Pt100 temperature constant of the cold junctions
Minimum range	50 °C

Sensor type	Standard	Basic range	Min. range span	Processing error Δp	Temperature processing error Δtp	Analogue output error
		°C	°C	K	K/K	%
1	2	3	4	5	6	7
B (Pt30Rh-Pt6Rh)	EN 60751+A2, IEC584, NIST MN175, DIN43710, BS4937, ANSI MC96.1, JIS C1602, NF C42-321	250 ÷ 1820	10	±0.55	<±0.001	Analogue output error is 0.05% FSO (Full Scale Output) over the operating temperature range.
E (Ni10Cr-Cu45Ni)		-200 ÷ 1000	10	±0.15	<±0.001	
J (Fe-Cu45Ni)		-210 ÷ 1200	10	±0.20	<±0.001	
K (Ni10Cr-Ni5)		-200 ÷ 1372	10	±0.30	<±0.001	
N(Ni14CrSi-NISi)		-200 ÷ 1300	10	±0.25	<±0.001	
R(Pt13Rh-Pt)		-20 ÷ 1768.1	10	±0.35	<±0.001	
S(Pt10Rh-Pt)		-30 ÷ 1768.1	10	±0.40	<±0.001	
T(Cu-Cu45Ni)		-200 ÷ 400	10	±0.15	<±0.001	
TC Type L	EN 60751+A2, GOST P 8.585-2001	-200 ÷ 800	10	±0.20	<±0.001	

Voltage

		mV	mV	μV	μV/K	As above
Measuring range No.1		-10…100	10	±6	<±0.06	
Measuring range No.2		-100…1000	10	±50	<±0.5	
1	2	3	4	5	6	7

Direct mounted sensors

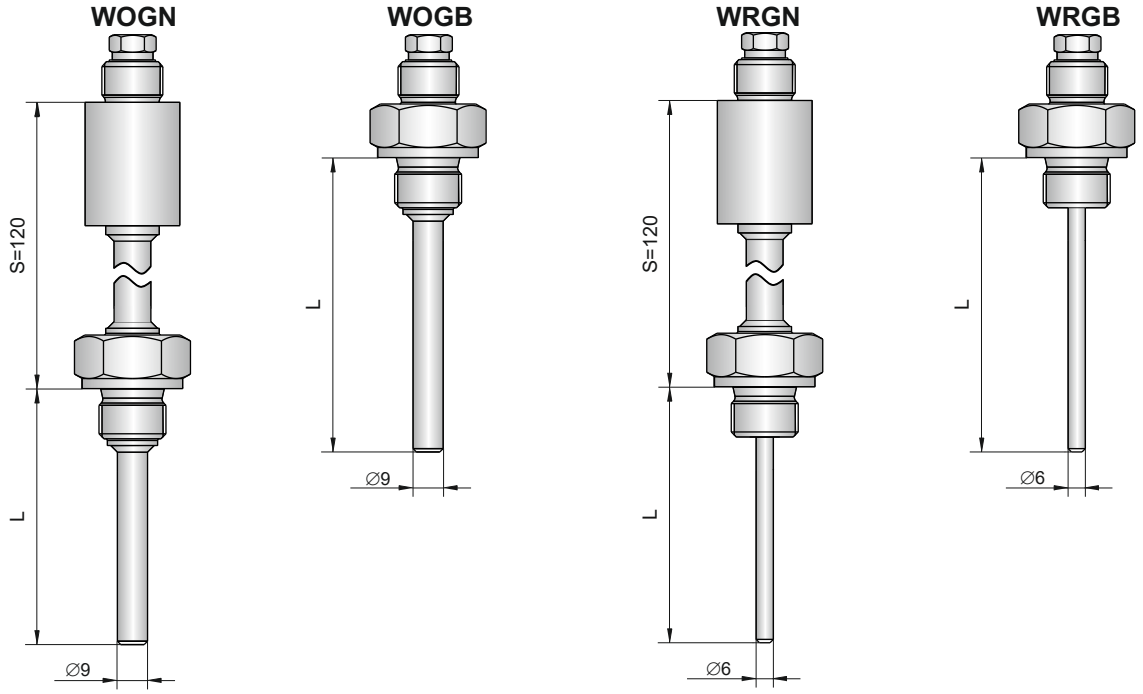

Sensor type	Standard dimensions of sensor			Sensor material	Available process connection
	∅[mm]	L[mm]	S[mm]		
WOGN	9	100, 160, 250, 400	120	316ss	M20x1,5; G1/2''; 1/2''NPT
WOGB	9	100, 160, 250, 400	-	316ss	M20x1,5; G1/2''; 1/2''NPT
WRGN	6	100, 160, 250, 400	120	316ss	M20x1,5; G1/2''
WRGB	6	100, 160, 250, 400	-	316ss	M20x1,5; G1/2''

WOGN, WOGB - welded sensors; WRGN, WRGB - spring-loaded sensors (to use with additional thermowell)

Ordering code

LI-24ALW /___/___/___÷___°C/___/___

Sensor type (optionally):
Direct: **WOGN, WOGB, WRGN, WRGB**
(According to below ordering code)
Remote: According to **Chapter X**

Settings (optionally):
Type of measuring element,
measuring range, alarm signal

Version:

Exia – Intrinsic safety certificate (ATEX, IECEx)

Ex II 1/2G Ex ia IIC T4/T5/T6 Ga/Gb
IECEx Ex ia IIC T4/T5/T6 Ga/Gb
1)

Ex II 2(1)G Ex ia [ia Ga] IIC T4/T5/T6 Ga/Gb
IECEx Ex ia [ia Ga] IIC T4/T5/T6 Ga/Gb
2)

Exia(Da) – Intrinsic safety certificate (ATEX, IECEx)

Ex II 1/2G Ex ia IIC T4/T5/T6 Ga/Gb
II 1D Ex ia IIIC T105°C Da
I M1 Ex ia I Ma (with SS enclosure)
IECEx Ex ia IIC T4/T5/T6 Ga/Gb
Ex ia IIIC T105°C Da
Ex ia I Ma (with SS enclosure)
1)

Ex II 2(1)G Ex ia [ia Ga] IIC T4/T5/T6 Ga/Gb
II 1D Ex ia IIIC T105°C Da
I M1 Ex ia I Ma (with SS enclosure)
IECEx Ex ia [ia Ga] IIC T4/T5/T6 Gb
Ex ia IIIC T105°C Da
Ex ia I Ma (with SS enclosure)
2)

Exd – Explosion proof certificate (ATEX, IECEx)

Ex II 2G Ex d IIC T* Gb
II 2D Ex t IIIC T* Db
I M2 Ex d I Mb (with SS enclosure)
IECEx Ex d IIC T* Gb
Ex t IIIC T* Db
Ex d I Mb (with SS enclosure)
1)

Ex II 2(1)G Ex d [ia Ga] IIC T4/T5/T6 Gb
II 2(1)D Ex t [ia Da] IIIC T105°C Db
I M2 Ex d [ia Ma] I Mb (with SS enclosure)
IECEx Ex d[ia Ga] IIC T4/T5/T6 Gb
Ex d[ia Da] IIIC T105°C Db
Ex t[ia Ma] I Mb (with SS enclosure)
2)

1) transmitter with sensor mounted in casing 2) transmitter without sensor or with cable senor

IP67 – protection class IP67
SS – housing material SS316
US – electrical and sensor connection 1/2"NPT F

WOGN/Exia/L=400mm/S=120mm/G1/2"/Pt100-A-2/316Lss/1/2"NPT

Type of sensor
Version: Standard, Exia, Exd
Dimmensions L and S [mm]
Process connection
Connection thread between sensor and transmitter
Sensor material
Type of measuring element

PandID®B.V. | t: +31 174 280 371 | e: info@pandid.nl | i: www.pandid.nl | www.lineblind.eu

Temperature transmitter type PT-25

- ✓ **Output signal 4 ÷ 20mA**
- ✓ **Stainless steel casing and wetted parts**
- ✓ **Factory configured**

Application and construction

Temperature transmitter type PT-25 is designed for temperature measurement of liquid and gaseous media in range from -50 to +100°C. Resistance signal from RTD element is converted to standard 4…20mA output signal. Casing of transmitter and wetted parts are made in stainless steel. Transmitter is manufactured in two versions: with removable measuring insert and not removable measuring insert which has additional protection against vibrations. Available electrical connections are angular connector DIN EN 175301-803 or connector M12x1.

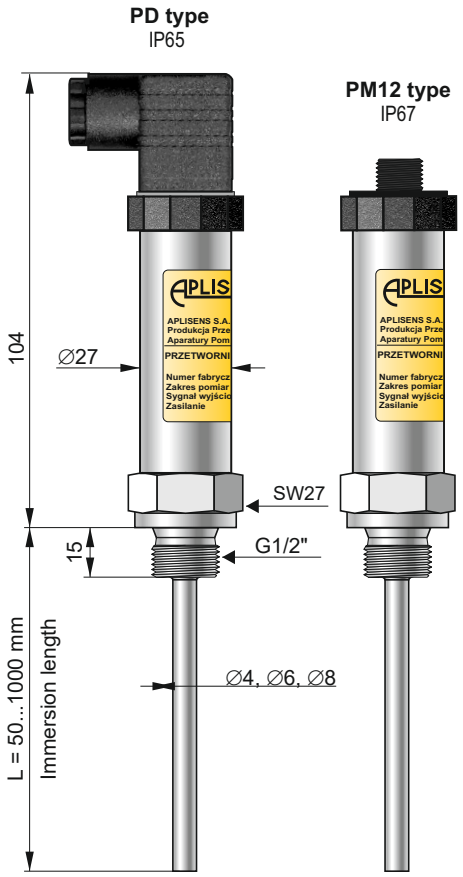

Technical data

Output signal	4...20mA
Measuring range	0...50°C, 0...100°C, -50...50°C, -50...100°C, 25...75°C, 50...100°C other on request
Minimum span	25K
Accuracy	± 1%
Power supply	8...35 V DC
Alarm signal	<3,1mA or >26,1mA
Wetted parts material	316
Sensor diameter	∅4, ∅6, ∅8mm
Process connection	G1/2", other on request
Immersion length	50...1000mm
Extension neck	on request
Ingress protection	PD - IP65, PM12 - IP67

Ordering procedure

PT-25/___/L = ... mm/___/___/___/__÷__°C/___

- Electrical connection: **PD** (connector DIN EN 175301-803) **PM12** (connector M12x1)
- Immersion length: **L=...mm** (standard: 50, 100, 150, 200, 250 mm other length on request)
- Diameter of sensor: 4, **6**, **8 mm**
- Connection thread: **G1/2"**, other on request
- Measuring range
- Alarm signal: **23 mA**
- Measuring instert: **R** - removable, **NR** - not removable

Rail-mounted smart temperature transmitters type LI-24L

- ✓ **Galvanic insulation (In, out)**
- ✓ **Programmable sensor type**
- ✓ **Programmable measuring range**
- ✓ **Thermoresistance line compensation**
- ✓ **Compensation of thermocouple cold junction**
- ✓ **Output signal 4…20mA + Hart protocol**
- ✓ **Ambient temperature from -25 to +75 °C**
- ✓ **Hart protocol**
- ✓ **Autodiagnostic system**
- ✓ **Safety version SIL2/SIL3**
- ✓ **Intrinsic safe version** Ex I M1 Ex ia I Ma II 1G Ex ia IIC T4/T5 Ga **IECEx** Ex ia I Ma Ex ia IIC T4/T5 Ga

HART COMMUNICATION PROTOCOL

SIL2/SIL3 Safety version

Technical data

Input signal	K, J, S, B, N, T, R, E voltage Pt10, Pt50, Pt100, Pt200, Pt500, Pt1000, Ni100, Cu100, resistance
Limit process	- 10mV< E<100mV or -100mV< E<1000mV 0Ω<R<400Ω or 0Ω<R<2000Ω
Min. measuring range	10mV or 10Ω
Output signal	4...20mA + HART
Power supply	10…50V DC Safety: 10...36V DC Safety, Safety Ex: 10...30V DC
Max. Wires resistance	500Ω
Alarm signal	21,6mA or 3,75 mA or setting by user
Sensor current	0,25mA
Accuracy	± 0,1%
Time constant	0,2...1s
Additional electronic damping	0...30s
Ambient temperature	-25…+75°C
Dimensions (WxHxD)	12,5mmx99mmx114,5mm

Application and function

The temperature transmitter LI-24L is applicable to converting resistance of temperature or voltage of thermocouple sensor to standard current signal 4-20mA. The transmitters have two separate measuring channels enabling measurement of temperature difference, average, average with redundancy, max or min temperature. Transmitter has compensation of ambient temparature influence and compensation of thermocouple cold junction using internal/external (Pt100) sensor or constant temperature.
Most of parameters such as: sensor type, measuring range, current alarm signal when electric circuit is broken, output characteristic correction, user characteristic (60 points) are programmed using PC with HART/USB converter and Raport 2 configuration software.
For request Aplisens can set temperature transmitter parameters like measuring range, type of sensor. Their values are printed on label. Transmitter for rail mounting (TS-35).

Electrical diagrams

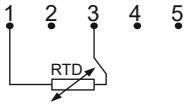

RTD 2-wires connection

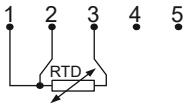

RTD 3-wires connection

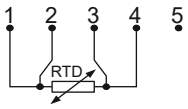

RTD 4-wires connection

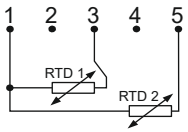

2 × RTD 2-wires connection

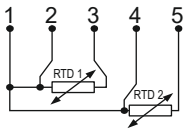

2 × RTD 3-wires connection

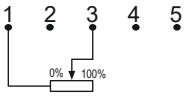

Potentiometer 2-wires connection

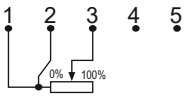

Potentiometer 3-wires connection

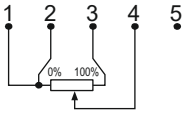

Potentiometer 4-wires connection

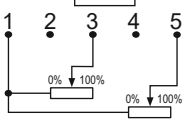

2 × Potentiometer 2-wires connection

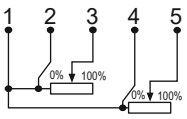

2 × Potentiometer 3-wires connection

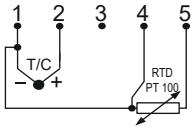

Thermocouple with external CJC

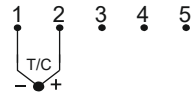

Thermocouple

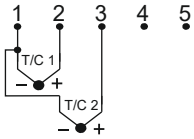

2 x Thermocouple

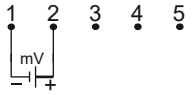

Voltage source

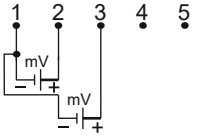

2 x Voltage source

LI-24L/___/___/___/___

Version: **Ex**, **Safety**, none

Sensor type

Measuring range

Alarm signal

Rail-mounted temperature transmitter type ATL

- ✓ **Programmable sensor type PT100 i Ni100**
- ✓ **Programmable measuring range.**
- ✓ **Thermoresistance line compensation (3 wires line)**
- ✓ **Output signal 4…20mA**
- ✓ **Rail- mounting system.**

Application and function

The temperature economical transmitter ATL is applicable to converting resistance of temperature sensor to standard current signal 4…20mA.
Most of parameters such as: sensor type, input signal, measuring range may be adapted by user for specific requirements of his measuring system.
The transmitter is programmed using PC with RS converter and Aplisens AT configuration software.
If you define type of sensor, measuring range in the order, then the transmitter is programmed with required parameters and their values are printed on serial number label.
Transmitter for rail mounting.

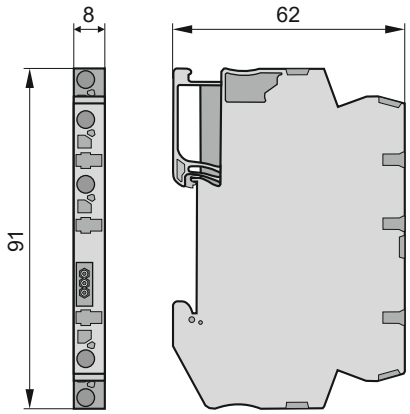

Technical data

Input signal	Pt 100, Ni 100
Limit process	20Ω <R<380Ω
Min. measuring range	10 Ω
Output signal	4 – 20 mA
Power supply	6…29V DC
Load resistance	R_o[kΩ]<(U_z – 7V)/25mA
Alarm signal	23mA or 3,8mA
Accuracy for ΔR>20Ω	± 0,2%
Thermal error	± 0,1% / 10°C
Ambient temperature	-25…+80°C
Error due to supply voltage changes	±0,1%

Ordering procedure.

ATL /___/__÷__°C/___

Sensor type:Pt100,Ni100

Measuring range

Alarm signal

Example: temperature transmitter ATL, sensor type Pt100, measuring range 0…100°C, alarm signal 23mA.

ATL/Pt100/ 0…100°C/23mA

Electrical diagrams

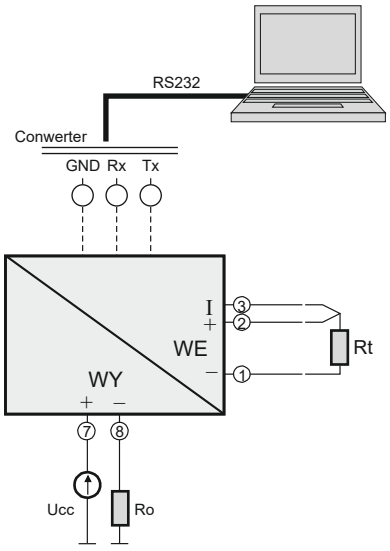

Head-mounted smart temperature transmitter type LI-24G

SIL2/SIL3 Safety version

- ✓ **Galvanic insulation (In, out)**
- ✓ **Programmable sensor type**
- ✓ **Programmable measuring range**
- ✓ **Resistant thermoresistance line compensation**
- ✓ **Compensation of thermocouple cold junction**
- ✓ **Output signal 4…20mA + Hart protocol**
- ✓ **Ambient temperature from -25 to +75 °C**
- ✓ **Hart protocol**
- ✓ **Safety version SIL2/SIL3**
- ✓ **Intrinsic Safety version**

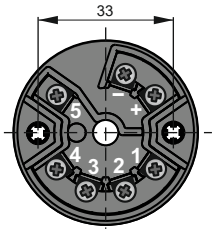

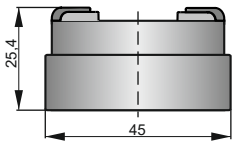

Ex I M1 Ex ia I Ma
II 1G Ex ia IIC T5/T6 Ga
II 1D Ex ia IIIC T105°C Da

IECEx Ex ia I Ma
Ex ia IIC T5/T6 Ga
Ex ia IIIC T105°C Da

Technical data

Input signal	L, K, J, S, B, N, T, R, E voltage Pt10, Pt50, Pt98, Pt100, Pt200, Pt500, Pt1000, Ni100, Cu50, Cu100, resistance
Limit process	- 10mV< E<100mV or -100mV< E<1000mV 0Ω<R<400Ω or 0Ω<R<2000Ω
Min. measuring range	10mV or 10Ω
Output signal	4...20mA + HART
Power supply	10...36V DC Safety: 10...36V DC Ex, Safety Ex: 10...30V DC
Max. sensor resistance	150Ω/200Ω
Alarm signal	21,6mA or 3,75 mA or setting by user
Sensor current	0,42mA
Accuracy	± 0,1%
Time constant	0,2...1s
Additional electronic damping	0...30s
Ambient temperature	-40...85°C Ex: -40...70°C

Application and function

The temperature transmitter LI-24G is applicable to converting resistance of temperature or voltage of thermocouple sensor to standard current signal 4-20mA. The transmitter has two separate measuring channels enabling measurement of temperature difference, average, average with redundancy, max or min temperature. Transmitter has compensation of ambient temparature influence and compensation of thermocouple cold junction using internal/external (Pt100) sensor or constant temperature.
Most of parameters such as: sensor type, measuring range, current alarm signal when electric circuit is broken, output characteristic correction, user characteristic (60 points) are programmed using PC with HART/USB converter and Raport 2 configuration software.
For request Aplisens can set temperature transmitter parameters like measuring range, type of sensor. Their values are printed on label.

Electrical diagrams.

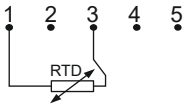

RTD
2-wires connection

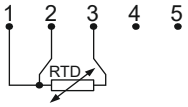

RTD
3-wires connection

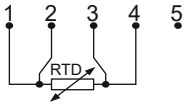

RTD
4-wires connection

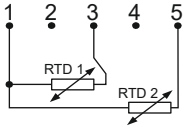

2 × RTD
2-wires connection

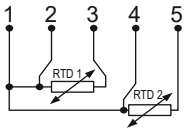

2 × RTD
3-wires connection

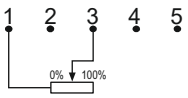

Potentiometer
2-wires connection

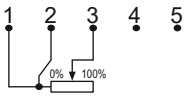

Potentiometer
3-wires connection

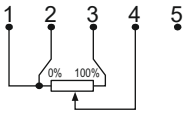

Potentiometer
4-wires connection

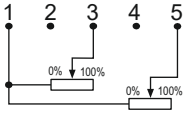

2 × Potentiometer
2-wires connection

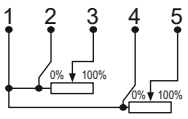

2 × Potentiometer
3-wires connection

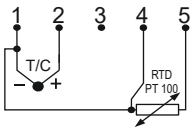

Thermocouple
with external
CJC

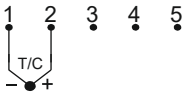

Thermocouple

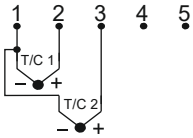

2 x Thermocouple

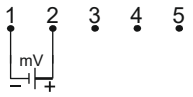

Voltage source

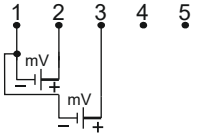

2 x Voltage source

LI-24G /___/___/___/___

Version: **Safety**, **Ex**, none

Sensor type

Measuring range

Alarm signal

Head-mounted temperature transmitter type AT-2

- ✓ **Sensor type PT100 or Ni100**
- ✓ **Thermoresistance line compensation (3 wires line)**
- ✓ **Output signal 4…20mA**
- ✓ **Head- mounting system.**

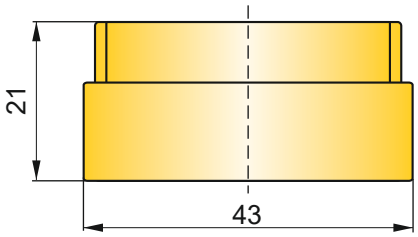

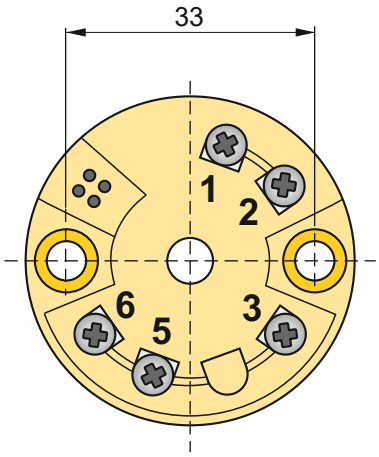

Application and function

The temperature economical transmitter AT-2 is applicable to converting resistance of temperature sensor to standard current signal 4…20mA. Most of parameters such as: sensor type, input signal, measuring range may be adapted by user for specific requirements of his measuring system.

User define type of sensor, measuring range in the order, the transmitter are programmed with required parameters and their values are printed on serial number label.
Transmitter for head mounting.

Technical data

Input signal	Pt 100
Limit process	20Ω <R<380Ω
Min. measuring range	25C°
Output signal	4 – 20 mA
Power supply	7,5…30V DC
Load resistance	R_d[kΩ]<(U_z – 7,5V)/22mA
Alarm signal	22mA or 3,6mA
Accuracy for ΔR>20Ω	± 0,1%
Thermal error	± 0,1% / 10°C
Ambient temperature	-40…+85°C
Error due to supply voltage changes	±0,01%/V

Note: for spans smaller than 75°C, the only permissible start values are: -40°C, -20°C, 0°C, +20°C and +40°C.

Electrical diagrams

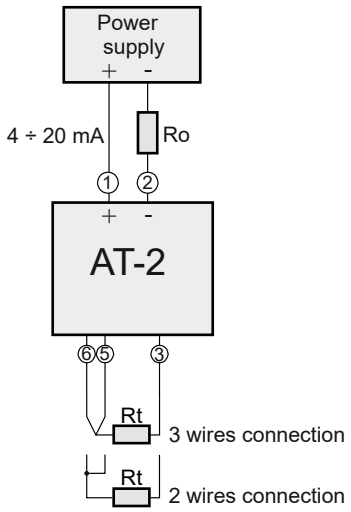

Ordering procedure.

AT-2 /___/__÷__°C/___

Sensor type:Pt100,Ni100

Measuring range

Alarm signal

Example: temperature transmitter AT-2, sensor type Pt100, measuring range 0…100°C, alarm signal 22mA.

AT-2/Pt100/ 0…100°C/22mA

Head-mounted temperature transmitter type ATX-2

- ✓**Sensor type: Pt100, Pt500, Pt1000, Ni100**
- ✓**Thermoresistance line compensation**
- ✓**Output signal 4…20mA**
- ✓**ATEX certificate Ex II 1G Ex ia IIC T6**
- ✓**Head-mounting system.**

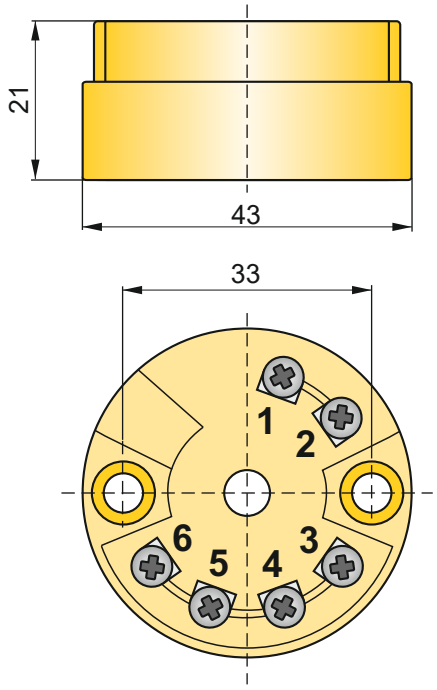

Application and function

The temperature transmitters are applicable to converting resistance of temperature sensor to standard current signal 4…20mA.
Most of parameters such as: sensor type, input signal, measuring range, may be adapted by user for specific requirements of his measuring system.
User define type of sensor, measuring range in the order, the transmitter are programmed with required parameters and their values are printed on serial number label.
Transmitter for head mounting.

Technical data

Input signal	Pt,Ni
Min.measuring range	10°C
Output signal	4–20mA
Power supply	8…30VDC
Load resistance	R_d[kΩ]<(U_z–8V)/22mA
Alarm signal	21mAor3,5mA
Accuracy for ΔR>20Ω	±0,2%
Thermal error	±0,05%/10°C
Ambient temperature	-40…+85°C
Accuracy:	

PT100: -100÷200°C	±0,2°C	PT1000: -100÷200°C	±0,2°C
PT100: -200÷850°C	±0,4°C	PT1000: -100÷250°C	±0,4°C
PT500: -100÷200°C	±0,2°C	Ni100: -60÷250°C	±0,2°C

Electrical diagrams

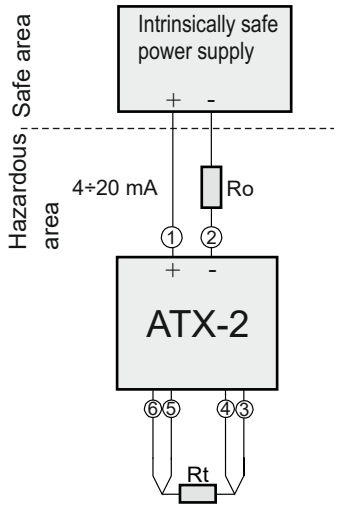

Input parameters

Input terminals 3, 4, 5, 6:
Uo = 9,6V, Io = 4,5mA, Po = 11mW,
Lo = 4,5mH dla IIC; 8,5mH dla IIB
Co = 709nF dla IIC; 1300nF dla IIB
Supply terminals 1(+) 2(-):
Ui = 30V, Ii = 100mA, Pi = 750mW, Li ~ 0, Ci ~ 0

Ordering procedure

ATX-2 /___/__÷__°C/___

Sensor type:Pt100,Ni100

Measuring range

Alarm signal

Example: temperature transmitter ATX-2, sensor type Pt100, measuring range 0…100°C, alarm signal 23mA.

ATX-2/Pt100/0…100°C/23mA

Head-mounted temperature transmitter type GI-22-2, GIX-22-2

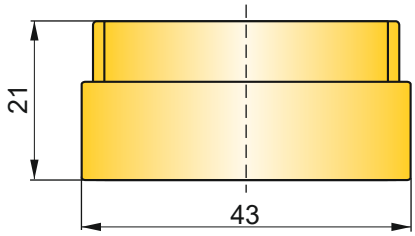

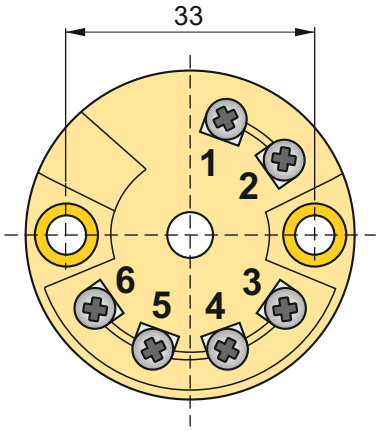

- ✓ **Galvanic insulation (In, out)e**
- ✓ **Thermoresistance line compensation (3 and 4 wires line)**
- ✓ **Compensation of thermocouple cold junction**
- ✓ **Output signal 4…20mA**
- ✓ **Head-mounting system**
- ✓ **Certificate ATEX Ⓔx II 1G Ex ia IIC T6 (GIX-22-2 version).**

Application and function

The temperature transmitters are applicable to converting resistance of temperature or voltage of thermocouple sensor to standard current signal 4…20mA.
Most of parameters such as: sensor type, input signal, measuring range, may be adapted by user for specific requirements of his measuring system.
User define type of sensor, measuring range in the order, the transmitter are programmed with required parameters and their values are printed on serial number label.
Transmitter for head mounting.

Technical data

Input signal	J, L, U, T, E, K, N, S, R, B, Pt, Ni
Min. measuring range	10°C for Pt, Ni 50°C for J, L, U, T, E, K, N 500°C for S, R, B
Output signal	4 – 20mA
Power supply	8…35V DC 8-30V DC for GIX-22-2
Load resistance	R_0[kΩ]<(U_z – 11V)/25mA
Alarm signal	22mA or 3,6 mA
Galvanic insulation	Optoelectrical

Accuracy

PT100: -100÷200°C	±0,2°C	J: -210÷1200°C	±0,5°C over -150°C
PT100: -200÷850°C	±0,4°C	L: -200÷900°C	±0,5°C
PT500: -100÷200°C	±0,2°C	U: -200÷600°C	±0,5°C
PT100: -200÷250°C	±0,4°C	T: -270÷400°C	±0,5°C over -200°C
PT1000: -100÷200°C	±0,2°C	E: -270÷1000°C	±0,5°C over -150°C
PT1000: -100÷250°C	±0,4°C	K:-270÷1372°C	±0,5°C over -140°C
Ni100: -60÷250°C	±0,2°C	N: -270÷1300°C	±1°C over -100°C
		S: -50÷1768°C	±2°C over +20°C
		R: -50÷1768°C	±2°C over +50°C
		B: 0÷1820°C	±2°C over +400°C

Thermal error	±0,05 %/10°C
Voltage error	±0,01%/V
Ambient temperature	-40…+85°C

Electrical diagrams

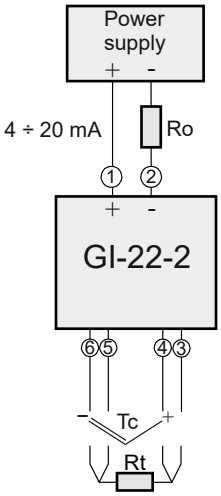

Ordering procedure

GIX-22-2 /___/__÷__°C/___

GI-22-2 /___/__÷__°C/___

Sensor type

Measuring range

alarm signal:
22mA or 3,6mA

Chapter X

Temperature sensors

Temperature sensor CT 25..... X/ 2

Temperature sensors with integrated protection tube or additional thermowell ..... X/ 3

Temperature sensor for high temperature applications ..... X/ 8

Temperature sensors without additional protection tube CT X..... X/ 10

Cable temperature sensor CT GE1, CT E1, CT R6,

CT E2..... X/ 12

Measuring insert, clamping grips..... X/ 13

Thermowells..... X/ 14

NEW

Temperature sensor type CT-25

- ✓ **RTD output signal**
- ✓ **Stainless steel casing and wetted parts**

Application and construction

Temperature sensor type CT-25 is designed for temperature measurement of liquid and gaseous media in range from -40 to +200°C. Casing of sensor and wetted parts are made in stainless steel. Available electrical connections are angular connector DIN EN 175301-803 or connector M12x1.

PD type
IP65

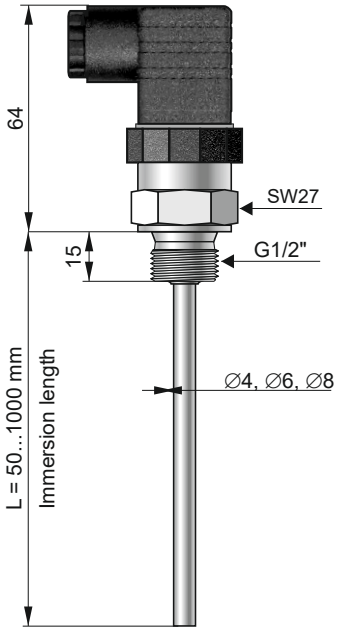

PM12 type
IP67

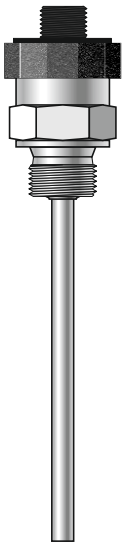

Technical data

Measuring range	-40...100°C
Accuracy	±(0,3+0,005|t|)°C (class B per IEC 60751)
Wetted parts material	316
Sensor diameter	∅4, ∅6, ∅8mm
Process connection	G1/2", other on request
Immersion length	50...1000mm
Extension neck	on request
Ingress protection	PD - IP65, PM12 - IP67

Ordering procedure

CT-25/___/L = ... mm/___/___/___/___

Electrical connection: **PD** (connector DIN EN 175301-803)
PM12 (connector M12x1)
Immersion length: **L=...mm** (standard: 50, 100, 150, 200, 250 mm other length on request)
Diameter of sensor: **4, 6, 8 mm**
Connection thread: **G1/2"**, other on request
Measuring element: **Pt100**
Number of wires: **2**, **3**, **2x2** (only in PM12 version)

TEMPERATURE SENSORS WITH INTEGRATED PROTECTION TUBE OR ADDITIONAL THERMOWELL TYPE CT

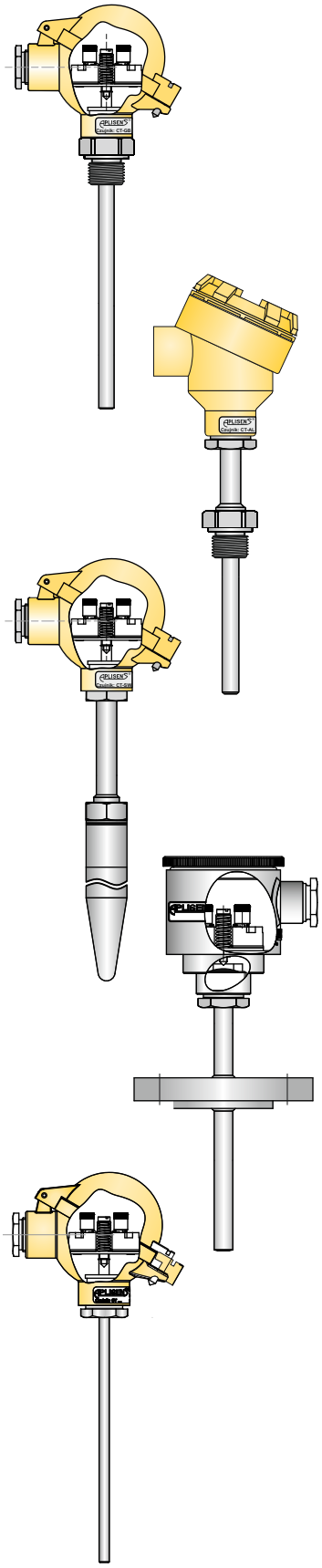

- ✓ **RTD (Pt100, Pt1000) and TC sensors**
- ✓ **ATEX Exia certificate**
- ✓ **ATEX Exd certificate**
- ✓ **DNV/GL marine certificate**

Features

Temperature sensors CT are offered as Pt100/Pt1000 resistance thermometers or thermocouples.

In resistance sensors (RTD) platinum resistors change their electrical resistance as a function of temperature. RTD, the most commonly used sensors in industry, are suitable for applications between -196…+600°C. The accuracy classes A and B are available with a tolerance acc. to IEC60751.

Thermocouples are made of two different conductors joined at the end. The temperature difference between junction, placed in measuring point (hot junction), and wire ends (cold junction), generate voltage proportional to the difference of temperature between these junctions. Thermocouples are suitable for the measurement of high temperatures, up to 1700°C.
The accuracy classes 1 and 2 are available with tolerance acc. to IEC60584.

Description

Temperature sensors model CT are offered in two designs:

- with integrated protection tube, fully welded and screwed into enclosure.
- for additional thermowell: machined from bar stock or from pipe.

In both cases sensors are equipped in spring- loaded measuring inserts which are replaceable. The interchangeable inserts can be replaced without dismounting sensor from installation. This enables inspection or, if necessary, service without stopping of running production process.

Sensors are suitable for gases and liquids. A large number of approvals and wide choice of process connections, connection heads, lengths of immersion and necks, types of measuring elements and materials of wetted parts allow for applications in:

- power industry
- chemical and petrochemical industry
-marine and offshore industry
- heavy industry
- food industry
- machine building
- plant construction

Technical details

Process part type	Measuring range
GB1	Pt100: -70…150°C Marine version: -25…150°C
GN1	Pt100: -70...500°C / -196…150°C 1) TC type J/K: -40…-550°C Marine version: -25…500°C
T1	Pt100: -70…500°C / -196…150°C 1) TC type J/K: -40…550°C Marine version: -25…500°C
P1	Pt100: -70…500°C / -196…150°C 1) TC type J/K: -40…550°C Marine version: -25…500°C
GB1X + thermowell	Pt100: -70…150°C Marine version: -25…150°C
GN1X + thermowell	Pt100: -70…500°C TC type J/K: -40…570°C Marine version: -25…500°C

1) On request

Accuracy		
For resistance thermoelements Pt100 acc. to PN-EN 60751:2009		
Class	Temperature range (°C)	Accuracy (°C)
A	-30...300	±(0,15+0,002·|t|)
B	-50...500	±(0,3+0,005·|t|)
For resistance thermocpuples K acc. to PN-EN 60584-1:2014		
Class	Temperature range (°C)	Accuracy (°C)
1	-40...375	±1,5
	375...1000	±0,004·|t|
2	-40...333	±2,5
	333...1200	±0,0075·|t|
For resistance thermocpuples J acc. to PN-EN 60584-1:2014		
Class	Temperature range (°C)	Accuracy (°C)
1	-40...375	±1,5
	375...700	±0,004·|t|
2	-40...333	±2,5
	333...750	±0,0075·|t|

Certification						
Exia	Ex	II 1/2 G Ex ia IIC T6...T1 Ga/Gb II 1D Ex ia IIIC T75°C Da		Ex	I M1 Ex ia I Ma	1)
Exd 2)	Ex	II 2G Ex d IIB+H_2T** Gb II 2D Ex tb IIIC T* Db	3)	Ex	II 1/2G Ex d IIB+H_2 T** Ga/Gb II 1/2D Ex tb IIIC T* Da/Db	4)
MR	Marine certificate DNV					

1) Only CT-CL version
2) Only CT-AL version
3) Location of complete equipment in zone 1 or 21

4) Measuring stem with screwed to the opening D2 of housing thermowell, with proper wall thickness (zone 0 or 20):
a) minimum 1,5mm, made of corrosion resistant steel or
b) minimum 1mm and fixed in protective thermowell (wall thickness minimum 1mm) made of corrosion resistant steel

Casing

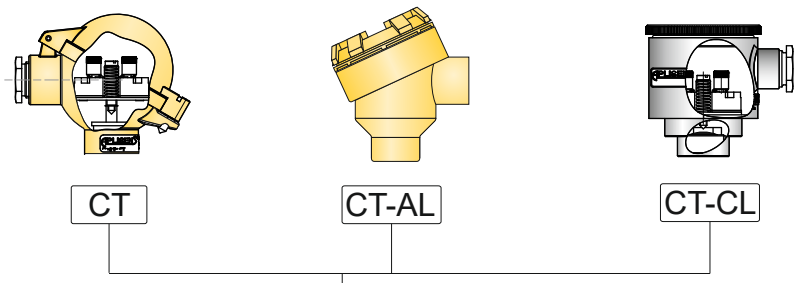

Process part

with integrated protection tube

for additional thermowell

GB1 | GN1 | T1 | P1 | GB1X | GN1X

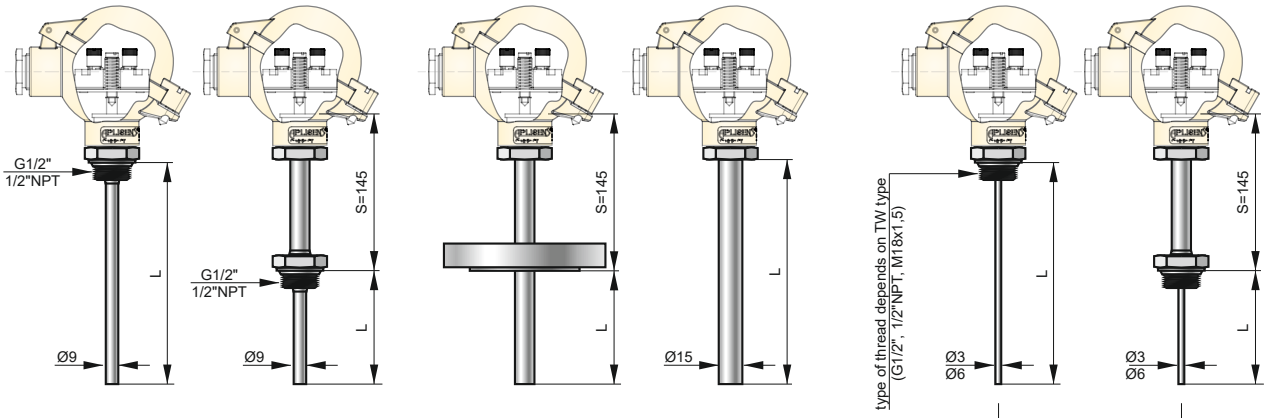

thermowell

OG2._ | OG3._ | T | SW2 | SW2T | SWG

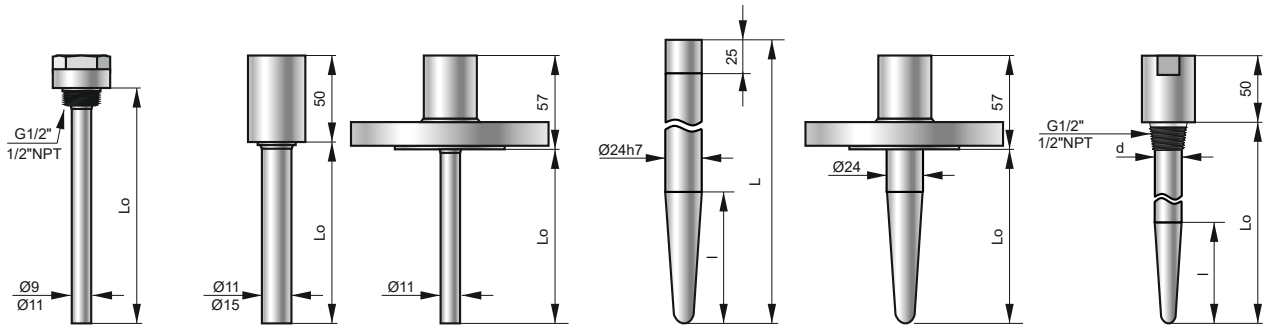

ORDERING PROCEDURE

Head Material						
CT					aluminum housing NA type	
CT-AL					aluminum housing DAO type	
CT-CL					stainless steel housing KO type	
	Process part					
	sensors with integrated protection tube					
	GB1				sensor with threaded process connection, diameter of sensor 9mm, 316ss	
	GN1				sensor with threaded process connection, diameter of sensor 9mm, neck S=145mm, wetted parts 316ss	
	T1				diameter of sensor 11mm, neck S=145mm, wetted parts 316ss	
	P1				diameter of sensor 15mm, wetted parts 316ss	
	sensors for additional thermowell					
	GB1X				spring loaded sensor with threaded process connection, wetted parts 316ss	
	GN1X				spring loaded sensor with threaded process connection, neck S=145mm, wetted parts 316ss	
		Certificate				
		x			standard version, no certificates	
		Exia /II		Ex	II 1/2 G Ex ia IIC T6...T1 Ga/Gb II 1D Ex ia IIIC T75°C Da	
		Exia /I		Ex	I M1 Ex ia I Ma	available in CT-CL housing only
		Exd		Ex	II 2G Ex d IIB+H_2T** Gb II 2D Ex tb IIIC T* Db	available in CT-AL housing only, location of complete equipment in zone 1 or 21
				Ex	II 1/2G Ex d IIB+H_2 T** Ga/Gb II 1/2D Ex tb IIIC T* Da/Db	available in CT-AL housing only, measuring stem with screwed to the opening D2 of housing thermowell, with proper wall thickness (zone 0 or 20): a) minimum 1,5mm, made of corrosion resistant steel or b) minimum 1mm and fixed in protective thermowell (wall thickness minimum 1mm) made of corrosion resistant steel
		MR			marine certificate	
			Measuring element			
			Pt		Pt100	
			2xPt		2xPt100	
			Pt1000		Pt1000	
			J		TC type J	
			2xJ		2x TC type J	
			K		TC type K	
			2xK		2xTC type K	
				Class of element		
				A/3	TR sensor, Class A, 3 wires	
				A/4	TR sensor, Class A, 4 wires	
				B/2	TR sensor, Class B, 2 wires	
				1/O	TC sensor, Class 1, ungrounded junction	
				2/O	TC sensor, Class 2, ungrounded junction	
				Thermowell		
				x	no thermowell	
				OG2.9	welded type, ext. diameter 9mm, wetted parts mat. 316ss	
				OG2.11	welded type, ext. diameter 11m, wetted parts mat. 316ss	
				OG2.15	welded type, ext. diameter 15mm, wetted parts mat. 316ss	
				OG3.11	welded type, ext. diameter 11mm, wetted parts mat. 316ss	
				OG3.15	welded type, ext. diameter 15mm, wetted parts mat. 316ss	
				OGT1.11	welded type, ext. diameter 11mm, wetted parts mat. 316ss	
				OGT1.15	welded type, ext. diameter 15mm, wetted parts mat. 316ss	
				SWG	drilled type, ext. diameter 17mm, wetted parts mat. 316ss	
				SW2	drilled type, ext. diameter 24h7, wetted parts mat. 316ss,	
				SW2T	drilled type, ext. diameter 24mm, wetted parts mat. 316ss,	
					Process connection	
					threaded type	
					M20x1,5	thread M20x1,5
					G1/2	thread G1/2"
					1/2NPT	Thread 1/2"NPT
					flange type	
					DN25PN40	flange DN25PN40
					DN40PN40	flange DN40PN40
					DN50PN40	flange DN50PN40
					ANSI 1" #150	flange ANSI 1" #150
					ANSI 1,5" #150	flange ANSI 1,5" #150
					ANSI 2" #150	flange ANSI 2" #150
					Clamping grips	
					UG15	diameter 15mm, thread M24x2
				Length of immersion part L		
				L= ….	required length of immersion [mm]	

Equipment of housing				
KZ				terminal block
TR				wires connections for assembling of temperature transmitter
AT-2				transmitter 4...20mA model AT-2
ATX-2				ATEX transmitter 4...20mA model ATX-2
LI-24G				smart transmitter 4…20mA + HART model LI-24G
LI-24G/Ex				ATEX smart transmitter 4...20mA + HART model LI-24G/Ex
LI-24G/SIL2				SIL 2, smart transmitter 4...20mA + HART model LI-24G/SIL2
LI-24G/Ex/SIL2				SIL 2, ATEX smart transmitter 4..20mA + HART model LI-24G/Ex/SIL2
GI-22-2				transmitter 4...20mA model GI-22-2
GIX-22-2				ATEX transmitter 4...20mA model GIX-22-2
	Measuring range			
	…			set range [deg C]
		Alarm signal		
		HI		signal >20mA
		LO		signal <4mA
			Special version	
			ND=…	diameter of sensor or thermowell different than standard [mm]
			NE=…	length of neck different than 145mm [mm]
			NM…..	wetted parts material different than standard
			NPC…	process connection different than standard
			…	description of required parameters

Temperature sensor
for high temperature applications

✓ - TC sensors J, K, S, B
✓ - ATEX Exia certificate

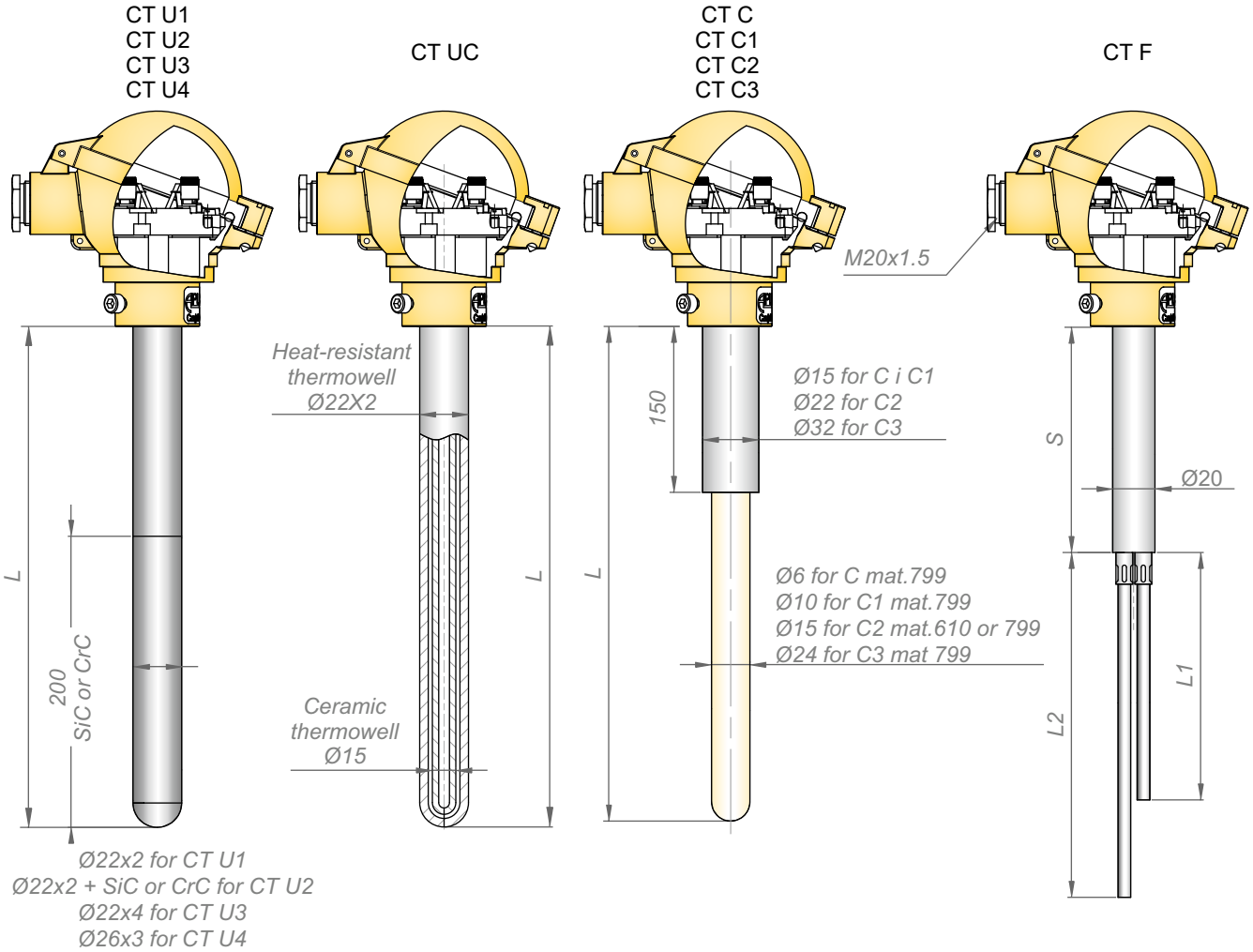

Features

Temperature sensors CT C, CT U, are offered as thermocouples.

Thermocouples are made of two different conductors joined at the end. The temperature difference between junction, placed in measuring point (hot junction), and wire ends (cold junction), generate voltage proportional to the difference of temperature between these junctions. Thermocouples are suitable for the measurement of high temperatures, up to 1700°C.
The accuracy classes 1 and 2 are available with tolerance acc. to IEC60584

Description

Temperature sensors model CTC and CTU are designed for high temperatures up to 1700°C.
Various wetted parts materials like heat resistant stainless steel, ceramic or sialon allow to cover many high temperature applications.

Sensors are offered with various fitting elements.
Typical application are:
- chemical application,
- metal alloys industry

Ordering procedure						
CT						
	Process part					
	U1					
	U2					
	U3					
	C1					
	C2					
	C3					
	F					
		Certificate				
		x				standard version, no certificates
		Exia /II				II 1/2 G Ex ia IIC T6...T1 Ga/Gb II 1D Ex ia IIIC T75°C Da
			Measuring element			
			J			TC type J
			2xJ			2x TC type J
			K			TC type K
			2xK			2xTC type K
			S			TC type S
			2xS			2xTC type S
			B			TC type B
			2xB			2xTC type B
				Class of element		
				1/O		TC sensor, Class 1, ungrounded junction
				2/O		TC sensor, Class 2, ungrounded junction
					Length	
					L= ….	required length of immersion [mm]
					S, L1, L2…=…	required length of immersion end extension [mm] – only CT-F
						Process connection
						X
						UC1-22
						UC2-22

PandID®B.V. | t: +31 174 280 371 |e: info@pandid.nl | i: www.pandid.nl | www.lineblind.eu

TEMPERATURE SENSORS WITHOUT ADDITIONAL PROTECTION TUBE TYPE CT X

- ✓ **RTD (Pt100, Pt1000) and TC sensors**
- ✓ **ATEX Exia certificate**

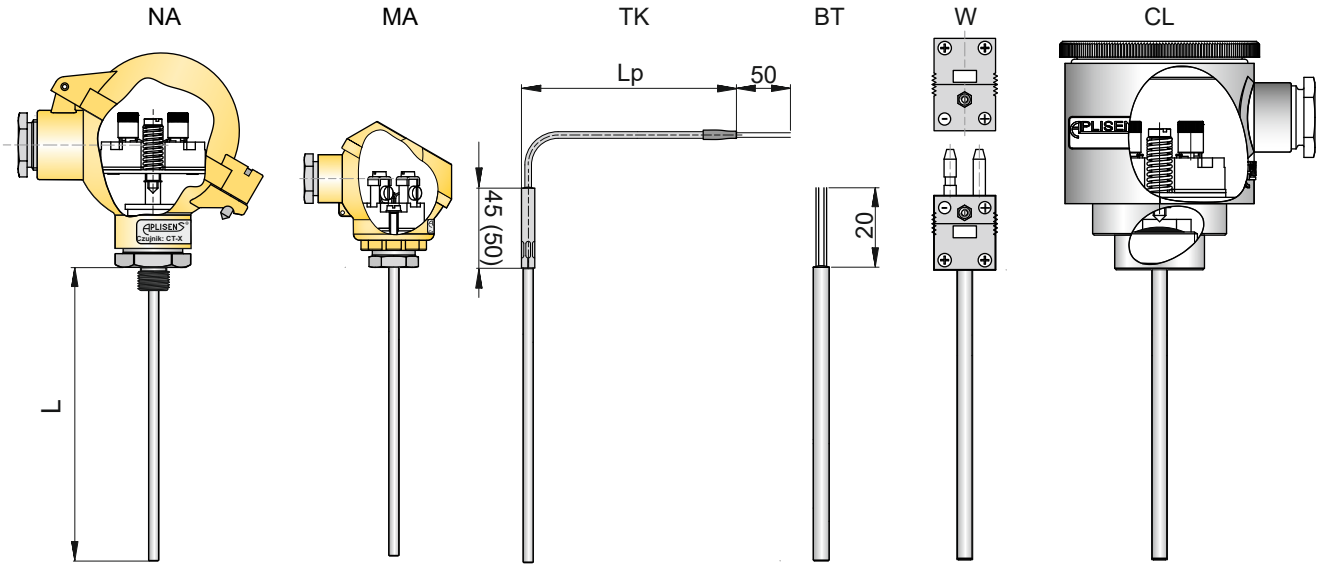

Features

Temperature sensors CT X are offered as Pt100/Pt1000 resistance thermometers or thermocouples.

In resistance sensors (RTD) platinum resistors change their electrical resistance as a function of temperature. RTD, the most commonly used sensors in industry, are suitable for applications between -200…+600°C. The accuracy classes A and B are available with a tolerance acc. to IEC60751.

Thermocouples are made of two different conductors joined at the end. The temperature difference between junction, placed in measuring point (hot junction), and wire ends (cold junction), generate voltage proportional to the difference of temperature between these junctions. Thermocouples are suitable for the measurement of high temperatures, up to 1700C.

The accuracy classes 1 and 2 are available with tolerance acc. to IEC60584.

Description

Temperature sensors model CT X are offered without additional protection tube.

Small diameters and flexibility of process part allow for assembling in not easily accessible places.

Sensors are suitable only for non-aggressive or abrasive liquids and gases. Usually are mounted directly into the process. Sensors can be mounted also into thermowells, in this case is recommended assembling with spring-loaded fitting or using transmission liquid.

Sensors are offered with various screwed connections of for insertion, with fitting elements like union nuts. Typical application are:

- machine building
- temperature measurement in motors, bearings

Ordering procedure						
CTX						
	Diameter of sensor					
	3			3mm		
	6			6mm		
	8			8mm		
		Certificate				
		x		standard version, no certificates		
		Exia /II		Ex	II 1/2 G Ex ia IIC T6...T1 Ga/Gb II 1D Ex ia IIIC T75°C Da	
		Exia /I		Ex	I M1 Ex ia I Ma	available with KO housing only
			Measuring element			
			Pt		Pt100	
			2xPt		2xPt100	
			J		TC type J	
			2xJ		2x TC type J	
			K		TC type K	
			2xK		2xTC type K	
				Class of element		
				A/3	TR sensor, Class A, 3 wires	
				A/4	TR sensor, Class A, 4 wires	
				B/2	TR sensor, Class B, 2 wires	
				1/O	TC sensor, Class 1, ungrounded junction	
				2/O	TC sensor, Class 2, ungrounded junction	
					Length	
					L= ….	required length of immersion [mm]
						Process connection
						X	Without threaded connection
						M20x1,5	thread M20x1,5 (only 6mm sensor)
						G1/2	thread G1/2" (only 6mm sensor)
						1/2NPT	thread 1/2"NPT (only 6mm sensor)
						UG/G1/2"	clamping grips with thread G1/2"
						UG/1/2"NPT	clamping grips with thread 1/2"NPT
						UG/G1/4"	clamping grips with thread 1/4"NPT
							Electrical connection
							BT
							TK
							W
							MA
							KO
							NA

PandID®B.V. | t: +31 174 280 371 |e: info@pandid.nl | i: www.pandid.nl | www.lineblind.eu

Cable temperature sensors
type CT GE1, CT E1, CT R6, CT E2

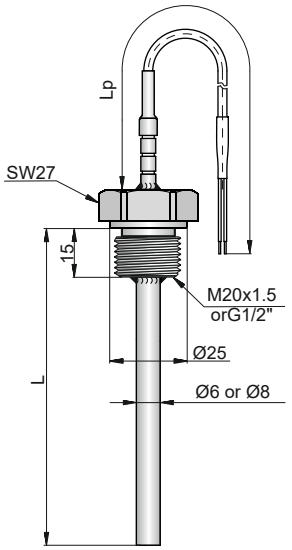

CT GE1

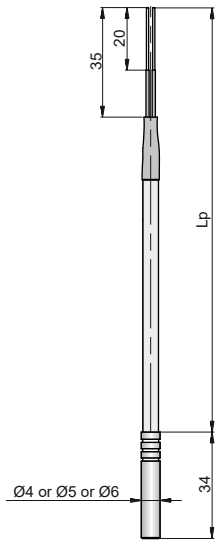

CT E1

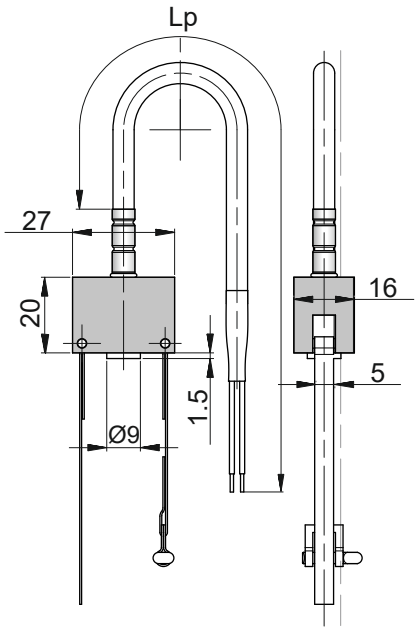

CT R6

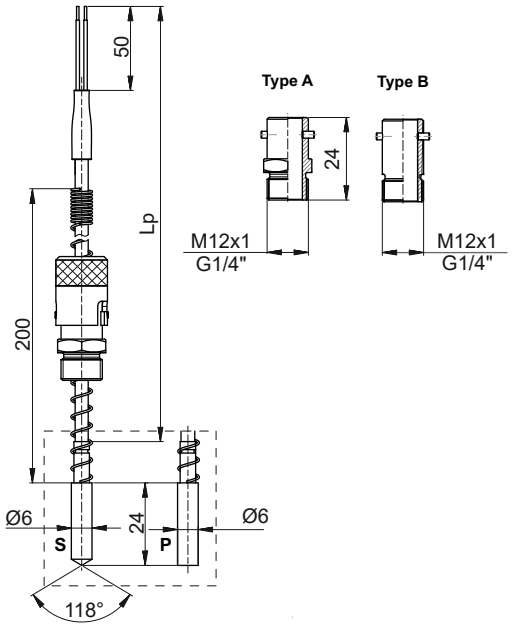

CT E2

Ordering procedure with example of ordering code:

CT	E1		Ø6	2000	Pt	A	4

- 4 — Wires numbers: 2, 3, 4- wires
- A — Class of measuring element: AA, A, B, C or 1, 2, 3
- Pt — Type and multiplicity of the measuring element: Pt, 2xPt
- 2000 — Cable length: Lp
- Ø6 — Diameter of sensor: 4, 5, 6 mm (*)
- (blank) — ATEX certificate: without Exia certificate
- E1 — Type of sensor

Certificate ATEX: Ex I M1 Ex ia I
II 1/2 G Ex ia IIC T6
II 1D Ex iaD 20 T75°C

ADDITIONAL INFORMATION:

1.(*) Non-standard lenght on demand.

Measuring insert W2, W4, W5

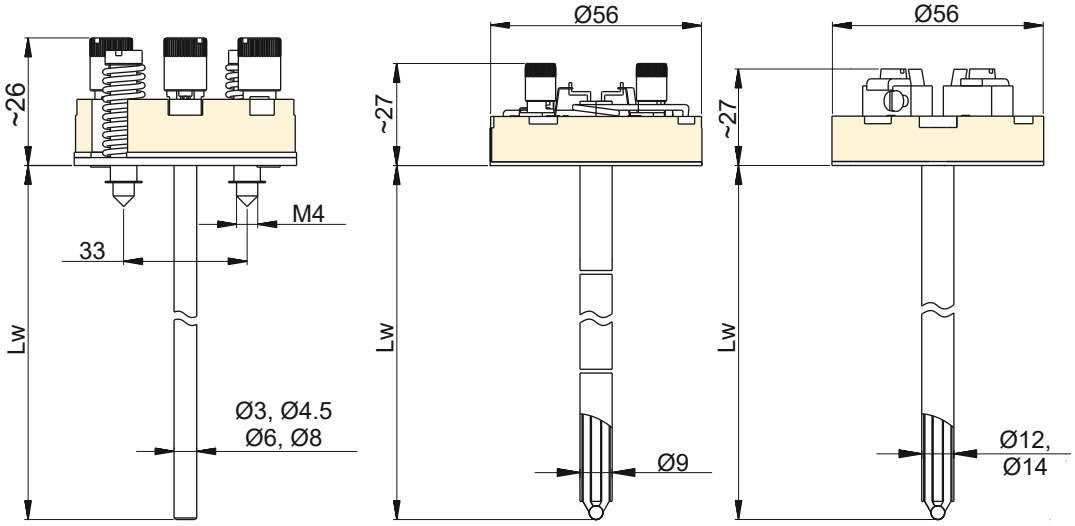

Ordering procedure

with example of ordering code:

CT – W2 – Ø8 – 405 – Pt100 – A – 3 – [ ]

- Type of junction: none or O, P.,Z
- Wires number: 2, 3, 4- wires (only for Pt100)
- Class of measuring element: AA, A, B or 1, 2
- Type and multiplicity of the measuring element: Pt, 2xPt or J, 2xJ, K, 2xK, S, 2xS, B, 2xB
- Mounting length: Lw - acc. to specification
- Diameter: Ø3, Ø4.5, Ø6, Ø8 / none for W4, W5
- Type of shield: W2, W4, W5

Measuring range of insert

	Insert type		
	W2	W4	W5
Pt	-70÷500°C/-196÷150°C**		
J	-40÷550°C		-40÷750°C
K	-40÷550°C/-40÷1000°C	-40÷1000°C (1100°C)*	-40÷1000°C (1150°C)*
S		0÷1300°C (1600°C)*	
B		600÷1600°C (1800°C)*	
Shield	316/Inconel	Ceramic	Ceramic

* - value in the bracket is the maximum admissible momentary temperature
** - low temperature version

CLAMPING GRIPS APPLIED FOR MOUNTING THE TEMPERATURE SENSORS

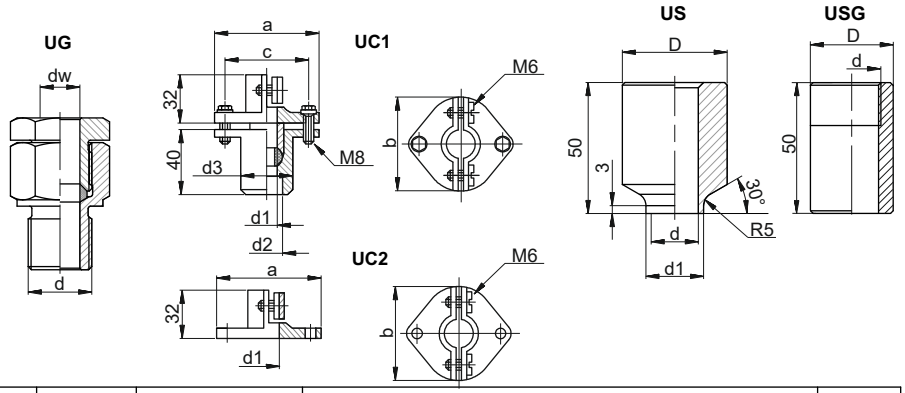

Type	Marking	Eksternal diameter of sensor's shield [mm]	Dimensions [mm]												Material
			dw	s	l	d	k	a	b	c	d1	d2	d3	D	
UG	UG6	6	6.5	22	16	M16x1.5	28								1.4301 or St
	UG8	8	8.5	22	16	M16x1.5	28								
	UG15	15	15.5	32	20	M24x2	32								
UC1	UC1-15	15						75	50	55	16	26	35		
	UC1-22	22						90	65	70	23	33	40		
UC2	UC2-15	22						75	50	55	16				
	UC2-22	22						90	65	70	23				
US	US18					Ø18H7					22			40	1.4301 15HM 10H2M
	US24					Ø24H7					30			50	
USG	USG-M20x1,5 USG-G1/2" USG-1/2"NPT					M20x1,5 G1/2" 1/2"NPT								30	1.4301

Admisible load: UG with SC sealing - 0,1MPa, UG with PZ sealing - 8MPa, UC1 - 0,1MPa

Ordering procedure with example of ordering code:

UG6 – 1.4301 – SC

- Sealing
- Material
- Type of clamping grip

PandID®B.V. | t: +31 174 280 371 |e: info@pandid.nl | i: www.pandid.nl | www.lineblind.eu

Welded thermowells

OG1.9
OG1.11

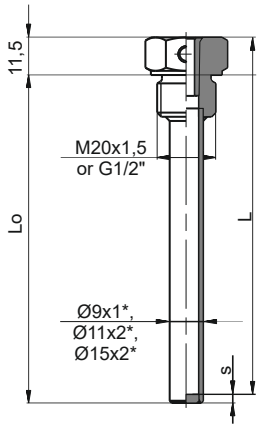

OG2.9; OG2.11
OG2.15

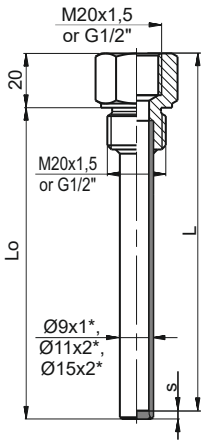

OG3.11; OG3.15

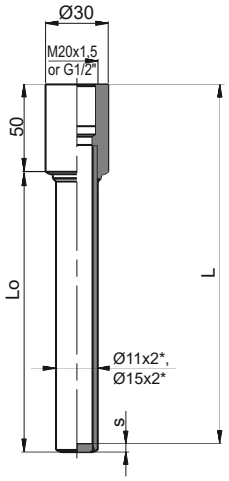

T1

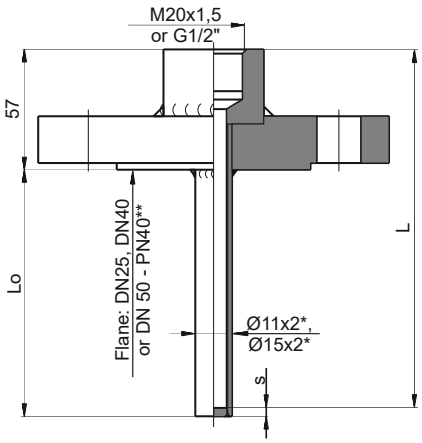

*Standard material: steel 316
s- depends on TW diamter

Drilled thermowells

SWG

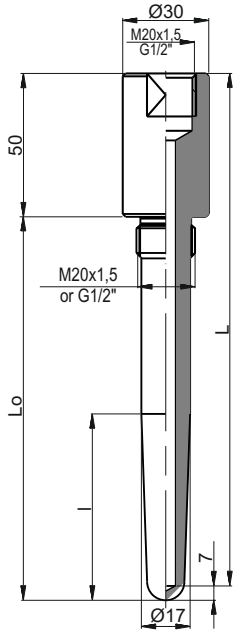

SW1 i SW2

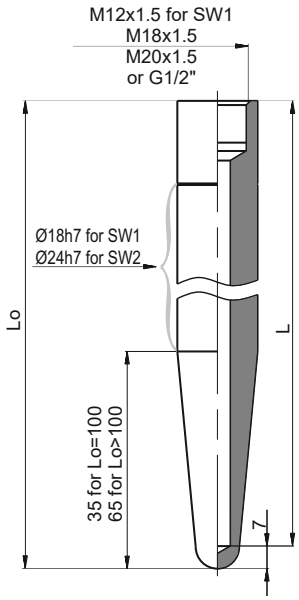

SW1T i SW2T

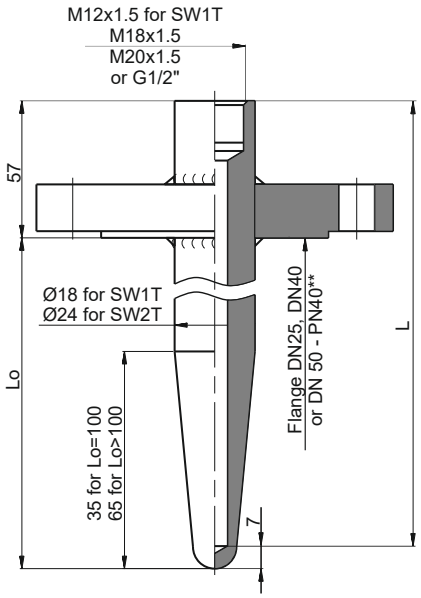

Standard material: steel 316, 1.7335 (13CrMo4-5,15HM), 1.7380 (10CrMo9-10, 10H2M)

Ordering procedure with exapmle of ordering code: OG2 – 100 – M20x1.5 – G1/2" – 1.4301 – 15x3

- OG2: Type of shield: OG..., T1, SWG, SW..., SW...T
- 100: Mounting length: L=100 mm (*)
- M20x1.5: Connection thread: external, none (*)
- G1/2": Connection thread: internal, none (*)
- 1.4301: Material (*)
- 15x3: Shield: Ø15x3 (*)

ADMISSIBLE LOADS FOR PARTICULAR TYPES OF SHIELDS AT SPECIFIED WORKING CONDITIONS

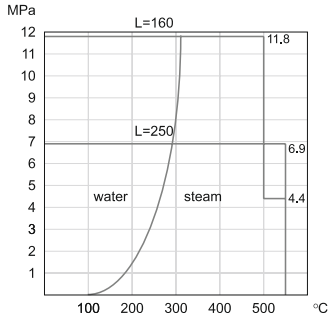

Graph 1. Admissible load of the G1 and T1 shields at the conditions of work - 15HM, 1H18N9T, H17N13M2T

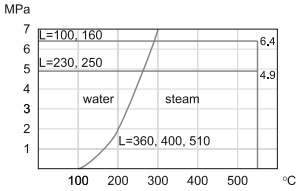

Graph 2. Admissible load of the GN1 and GB1 shields at the conditions of work - 15HM, 1H18N9T, H17N13M2T

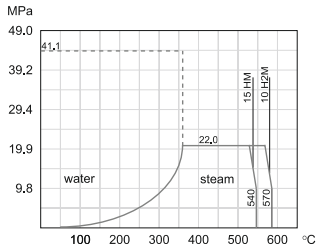

Graph 3. Admissible load of the SW1 and SW2 shields at the conditions of work

Notes

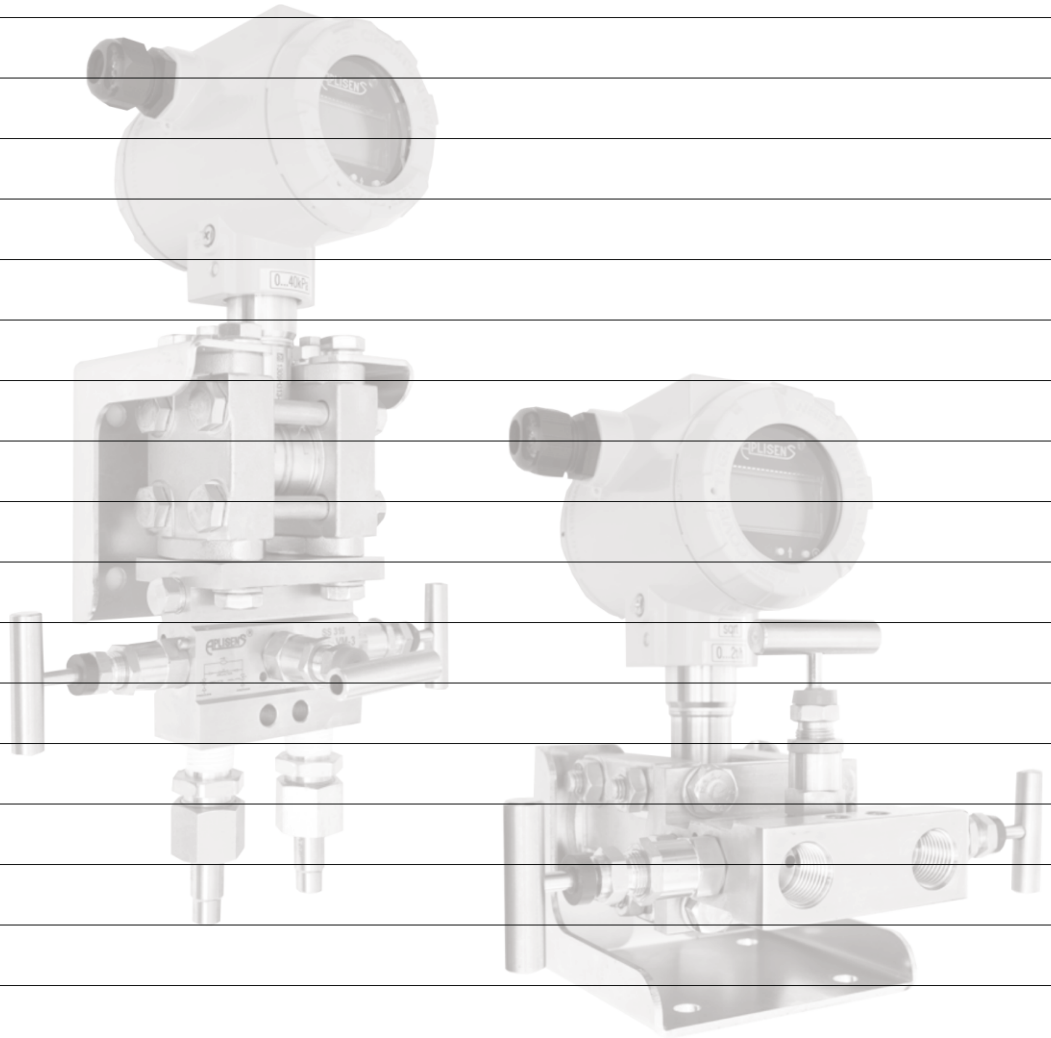

Chapter XI

Electropneumatic positioner

Electropneumatic positioner APIS..... XI/ 2

Electropneumatic positioner APIS

- ✓ **HART protocol**
- ✓ **ATEX certificate Ⓔx II 2G Exia IIC T5/T6 Gb**
- ✓ **Simple in installation and programming**
- ✓ **Possibility of remote assembling of positioner**
- ✓ **Low air consumption**
- ✓ **Programmable speed of movement of the actuator's piston rod**
- ✓ **Position transmitter**
- ✓ **Possibility of manual controlling of position of actuator's piston rod**

Technical data

Input signal (control)	4…20mA + Hart
Output signal (position transmitter)	4…20mA
Supply of position transmitter	10÷36 VDC (Ex 10÷30 VDC)
Supply pressure	140÷800 kPa
Pneumatic input signal (control actuator)	0…100% of supply pressure
Own air consumption	≤ 0,035 kg/h at supply voltage 140 kPa ≤ 0,015 kg/h at supply voltage 600 kPa
Air mass stream on positioner output	≥ 3,25 kg/h at supply voltage 140 kPa ≥ 13kg/h at supply voltage 800 kPa
Actuator piston rod displacement range	10÷100 mm (for single-acting linear actuators) 80÷900 mm (for double-acting linear actuators) 0÷180° (for rotational actuators)
Actuator operation characteristics	linear
Positioner operation mode	normal or reversible
Positioner transducer mode	normal or reversible
Additional errors	< 0,05% / 100kPa
- from supply pressure changes	0,15% / 10°C – for temperature range -30°C÷+60°C
- from ambient temperature changes	0,25% / 10°C – for temperature range -40°C÷-30°C and +60°C÷+85°C
- from vibration in range: 10...60Hz, amplitude < 0,35 mm 60....500Hz, acceleration 5g	0,25%
Hysteresis	< 0,4%
Insensibility threshold	< 0,1%
Protection degree of positioner enclosure	IP 65 according to PN-EN 60529:2003
Operation position	any
Weight	1,8 kg

Operating conditions

Working medium	air free of dust, oil, aggressive pollutants, solid particles bigger than 1.5 µm, such relative humidity not lower that dew point's temperature should not be lower than 10°C with respect to ambient temperature (acc. to PN-EN 60654-2:1999).
Ambient temperature Execution without manometers and with stainless steel manometers:	-40°C÷+85°C
Executions with manometers in stainless steel	
Humidity of ambient air	< 95%
Allowable vibrations 10...60Hz, 60...500Hz	acc. to PN-EN 60654-3: 1997; class VH6 amplitude < 0,35 mm acceleration ≤ 5g

Ordering procedure

APIS - X X X – DXX – RXX – IHE – TXX – PX – MX – WX – AX

Intend use:

- for single-operating actuator	1
- for double-operating actuator	2

- for installation on actuator	0
- for installation outside actuator with	
external position transmitter (potentiometer) – IP54 [1]	1
external position transmitter (potentiometer) – IP67 [1]	2
external position transmitter (magnetic) – IP67 [1], [2]	3
external position transmitter (potentiometer) – IP65 [3]	4

Distance of positioner from actuator:

- … m (0 ÷ 15 m)	XX

Execution:

- standard	St
- intrinsically safe Ex II 2G Exia IIC T6/T5 Gb	EX

Analog position transmitter:

- without position transmitter	00
- with output signal 4÷20 mA [4]	20

Pneumatic connectors:

- without connectors (thread Rp1/8")	0
- connectors to brass pipes ∅6 mm	1
- connectors to stainless steel pipes ∅6 mm	2
- connectors to Polyethylene pipes ∅6 mm	3
- connectors to brass pipes ∅8 mm	4
- connectors to stainless steel pipes ∅8 mm	5
- connectors to Polyethylene pipes ∅8 mm	6
- connectors to Polyethylene pipes ∅6 mm (ERMETO)	7
- other	8

Manometers:

- with manometers in st. steel execution (∅40 mm, st. steel housing, glass window)	2
- with manometers in st. steel execution and st. steel wetted parts (∅40 mm, glass window)	3
- other	4

Electrical entry:

- plastic packing gland (∅4 ÷ 9 mm cable)	1
- nickeled brass packing gland (∅4 ÷ 9 mm cable)	2
- other	3

Mounting kit:

- without mounting kit	0
- with mounting kit (code according to below table)	1

[1] For double-operating linear actuator.
[2] Not available with ATEX
[3] For single-operating linear diaphragm actuators and single and double-operating rotational actuators
[4] The positioner can set reverse of analogue output signal (20…4 mA). The reverse function of the output signal is switched on programmatically by the user.

Mounting kit		Type of actuator
APIS-A000	For APIS-100-…	Type P or R, Polna S.A. (mounted on the columns)
APIS-A001		Type 37 or 38, Polna S.A. (yoke)
APIS-A002		Type P1 or R1, Polna S.A. (diaphragm multi-spring)
APIS-A003		Actuator acc.PN-EN 60534-6-1:2001 (Samson, Arca Regler)
APIS-A050	For APIS-X00-…	Actuator acc. EN ISO 5211, DIN 3337, VDI/VDE 38450 Namur, (Air Torque, Ebro-Armaturen, El-O-Matic)
APIS-AXXX	For APIS-201-…	Actuator acc. ISO 6431 (CNOMO Prema Kielce)
	-SS	Material: stainless steel
	-SO	Material: zinced steel

Chapter XII

Hart communication tools

KAP-03, Raport 2, HART/USB converter ..... XII/ 2

Communication tools

Raport 2 software

RAPORT 2 is a software designed for communication and data transfer from transmitters with Hart or Modbus protocol made by APLISENS.
The communication with the transmitters enables:
- Identification of a transmitter,
- Configuration of its output parameters:
- Reading of a PV values (e.g. pressure, output current, degree of output setting in %).
- Enforcement of output current with a given value,
- Transmitter calibration in relation to master pressure,
- Function linearization (user characteristic creator),
- Zeroing

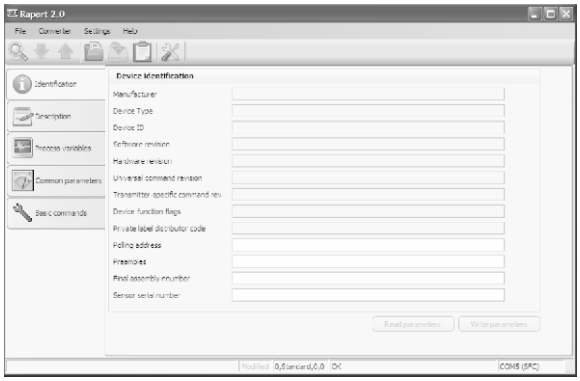

NEW Aplisens Mobile Configurator

Aplisens Mobile Configurator is an Android application designed for communication and data transfer from transmitters with Hart or Modbus protocol made by APLISENS.
The communication with the transmitters enables:
- Supports wireless Bluetooth connection
- Read basic device information
- Configure device's Tag, Descriptor, Message, Address, etc.
- Monitor process variables
- Configure range and units
- Set/Unset write protection
- Configure specific features of pressure transmitters (LCD, alarms, transfer function, user variable

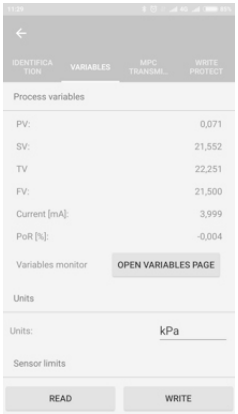

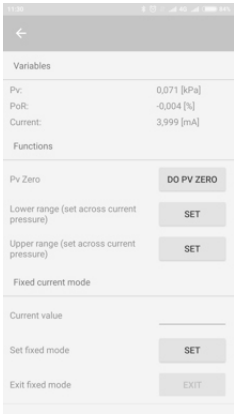

Hart Field Communicators KAP-03 and KAP-03Ex

Specification:

The **KAP-03 (KAP-03Ex)** HART field communicator is a portable battery supplied device used for communication and exchange of data with smart transmitters e. g. pressure, differential pressure transmitters. It features an output built as a standard current loop 4-20 mA, using FSK modulation type BEL 202 with an implemented HART communication protocol revision 5 and revision 6. The communicator is specially designed to configure smart transmitters manufactured by APLISENS.

KAP-03 version:

KAP-03 - standard version
KAP-03Ex - intrinsic safe version Ex II 2G Ex ia IIC T4 Gb

HART/USB converter

HART/USB converter allows for connecting and configuration of Hart transmitters via USB port. It works also with devices equipped in Bluetooth.

Notes

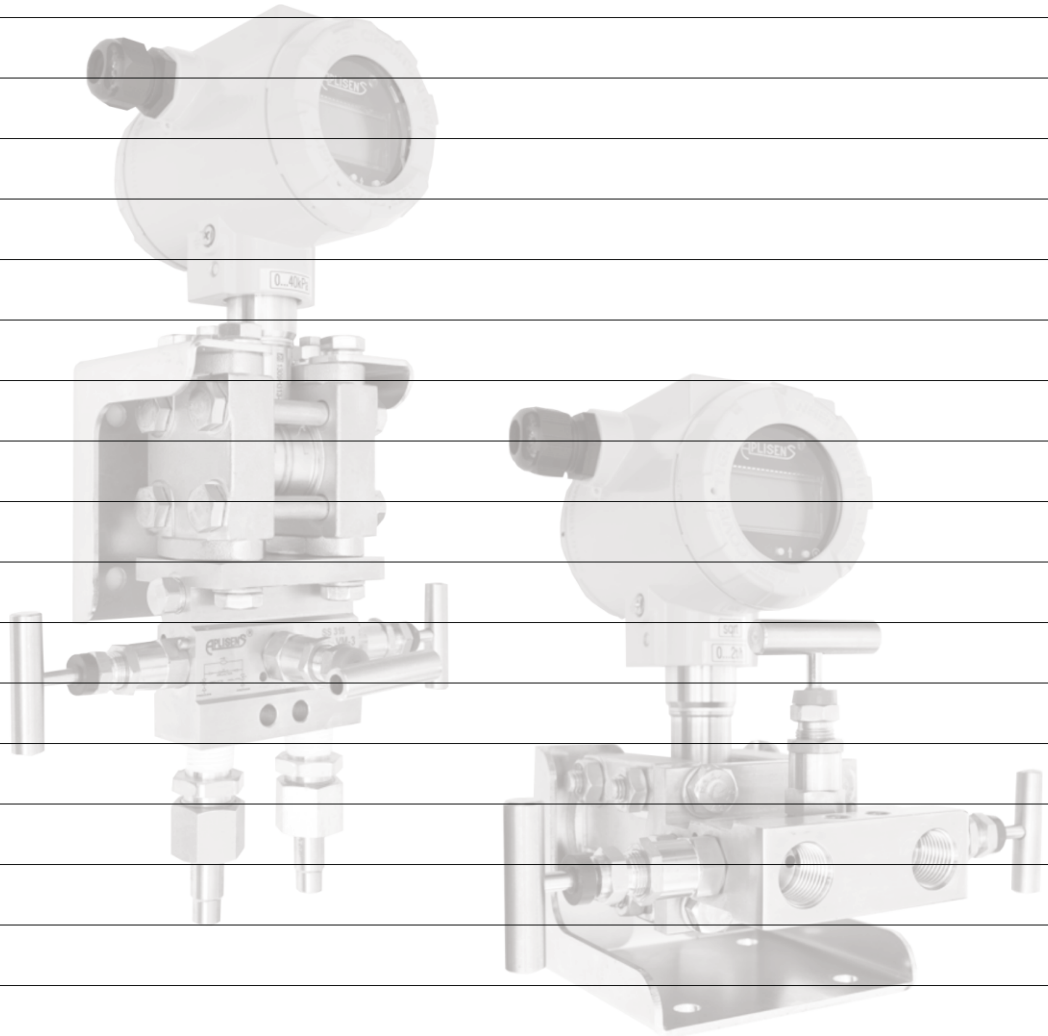

Notes

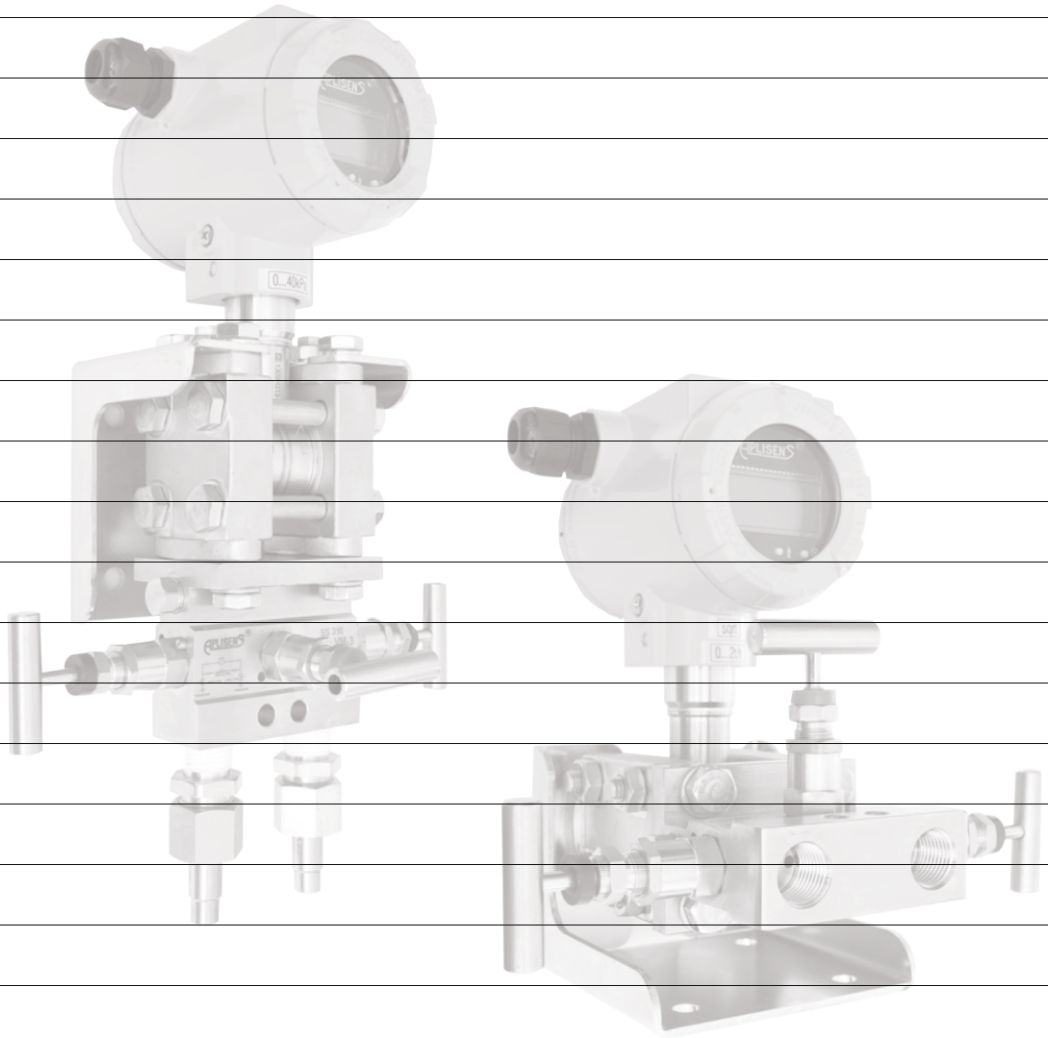
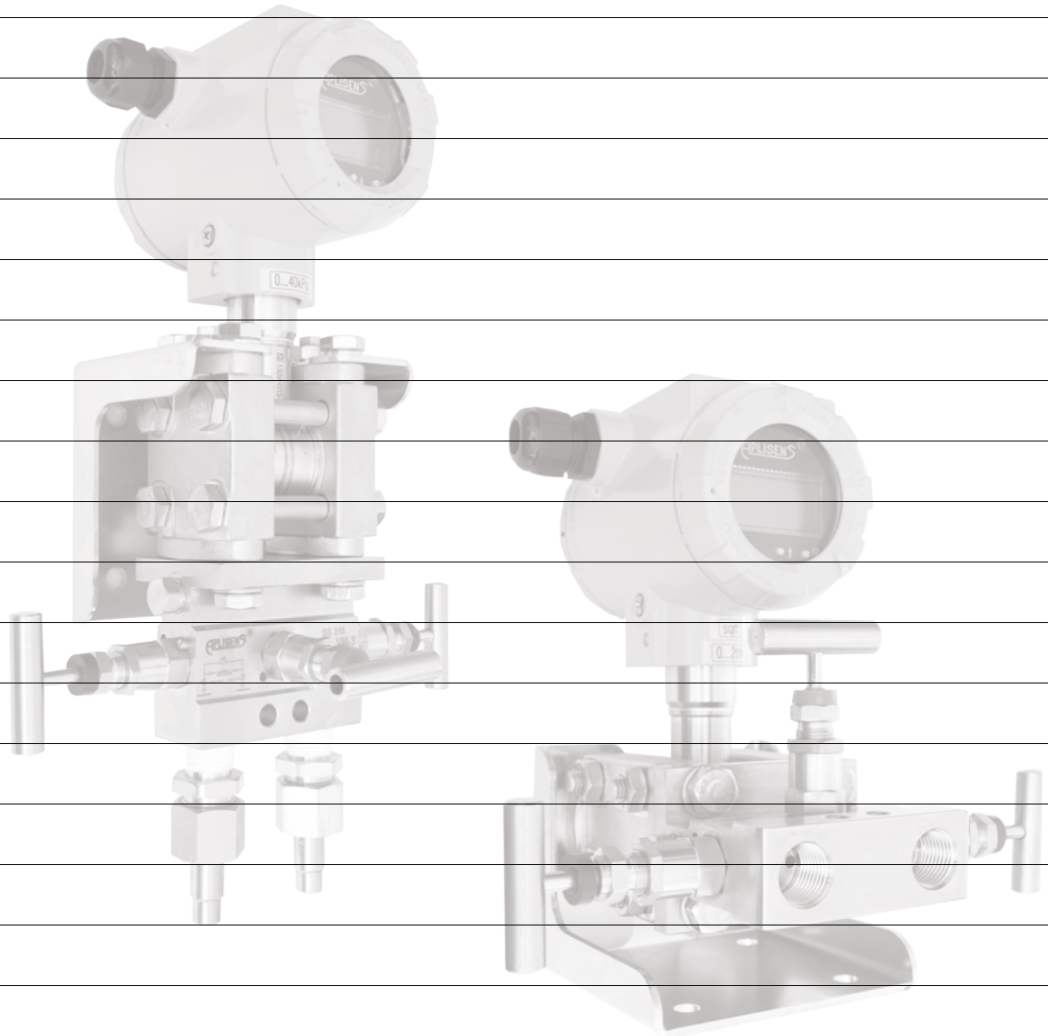
Notes