Type test approved safety valves angle-type for industrial applications

→ Series 461

461

Safety valves made of stainless steel, angle-type with threaded connections

SUITABLE FOR

Liquids	neutral and non-neutral	
Air, gases and vapours	neutral and non-neutral	
Steam		

EXAMPLES OF USE

For the protection of:
- pressure tanks and -systems for neutral / non-neutral vapours, gases and liquids
- steam boilers and steam plants

Please observe plant-specific regulations and use of appropriate valve version and sealing material.

- chemical plants, biogas plants
- desalination plants
- process equipment construction and medical technology
- shipbuilding industry and marine equipment
- secondary areas in the food-, beverage-, pharmaceutical- and cosmetics-industries
- offshore-applications

Safety valves are set and sealed at the factory.

MATERIAL

SPECIFICATION

1/4“ – 1/2“	– 60°C to + 225°C depending on version	0,5 – 70 bar

APPROVALS

TÜV-Type test approval 2061	**D/G, F**
EC type examination	**S/G, L**
TSG ZF001-2006	**D/G (S/G), F (L)**
TR ZU 032/2013 -TR ZU 010/2011	**D/G (S/G), F (L)**

Requirements

AD 2000 Data sheet A2	PED 2014/68/EU
TRD 421	KGS AA 319
DIN EN ISO 4126-1	

Classification society

DNVGL	DNVGL
Lloyd’s Register EMEA	LR EMEA
American Bureau of Shipping	ABS
Russian Maritime Register of Shipping	RS
Registro Italiano Navale	RINA

MATERIALS

Component	Material	DIN EN	ASME
Inlet body	Stainless steel	1.4404	316 L
Outlet body	Stainless steel	1.4408	CF8M
Internal parts	Stainless steel	1.4404	316 L
Spring	Stainless steel	1.4310	302

Series 861 ■ VALVE VERSION

s	Standard, non-gastight version of the spring housing	for neutral media without counter pressure, not for medium in combination GF
t	gastight version of spring housing	for neutral and non-neutral media, not counter pressure compensated. The environment is protected from being affected by the medium.

■ MEDIUM

G	gaseous	Air, vapours, gases and steam
F	liquid	The temperature of the medium under atmospheric pressure must not reach boiling point
GF	gaseous and liquid	Air, vapours, gases, steam and liquids Only available as gastight version with spring housing

■ TYPE OF LIFTING MECHANISM

K	Standard with twist-type lifting mechanism, non-gastight version
L	Lifting lever, non-gastight version
O	without lifting device, standard for gastight version

■ AVAILABLE NOMINAL DIAMETERS AND CONNECTION SIZES

Nominal diameter DN		**8**	**10**	**15**
Inlet		1/4“ (8)	3/8“ (10)	1/2“ (15)
Outlet	1/2“ (15)	■	■	■

■ TYPE OF CONNECTION INLET / OUTLET THREADED CONNECTIONS

m / f	Standard	Male thread BSP-P / Female thread BSP-P	DIN EN ISO 228-1 / DIN EN ISO 228-1

■ SEALS

PTFE	Polytetrafluoroethylene	Flat seal up to 25 bar	–60°C to +225°C
PTFE+Kohle	Polytetrafluoroethylene + carbon	Flat seal from 25,1 bar	–60°C to +225°C

NOMINAL DIAMETERS, CONNECTIONS, INSTALLATION DIMENSIONS

Series 461: Connection, installation dimensions, ranges of adjustment					
Nominal diameter	**DN**	**8**	**10**	**15**	
Connection DIN EN ISO 228	**G**	1/4" (8)	3/8" (10)	1/2" (15)	1/2" (15)
Outlet DIN EN ISO 228	**G1**	1/2" (15)	1/2" (15)	1/2" (15)	1/2" (15)
Installation dimensions in mm	**L**	34	34	34	34
	Lmax	78	78	78	78
	H	79	79	79	133
	H1	93	93	93	150
	Hmax	111	111	111	168
	h	31	31	31	31
	h1	12	12	15	15
	SW	30	30	30	30
Coefficients of flow ISO 4126-1	**αw /Kdr (F)**	0,5	0,44	0,47	0,47
Coefficients of flow ISO 4126-1	**αw /Kdr (D/G)[1])**	0,68	0,64	0,71	0,71
	do	6	8	10	10
Weight	**kg**	0,5	0,5	0,6	1
Range of adjustment	**bar**	0,5-70	0,5-70	0,5-30	30,1-70

[1]Coefficients of flow for blow-off pressures >3,0 bar. For lower pressures refer to values in the capacity table.

MAIN DIMENSIONS, INSTALLATION DIMENSIONS

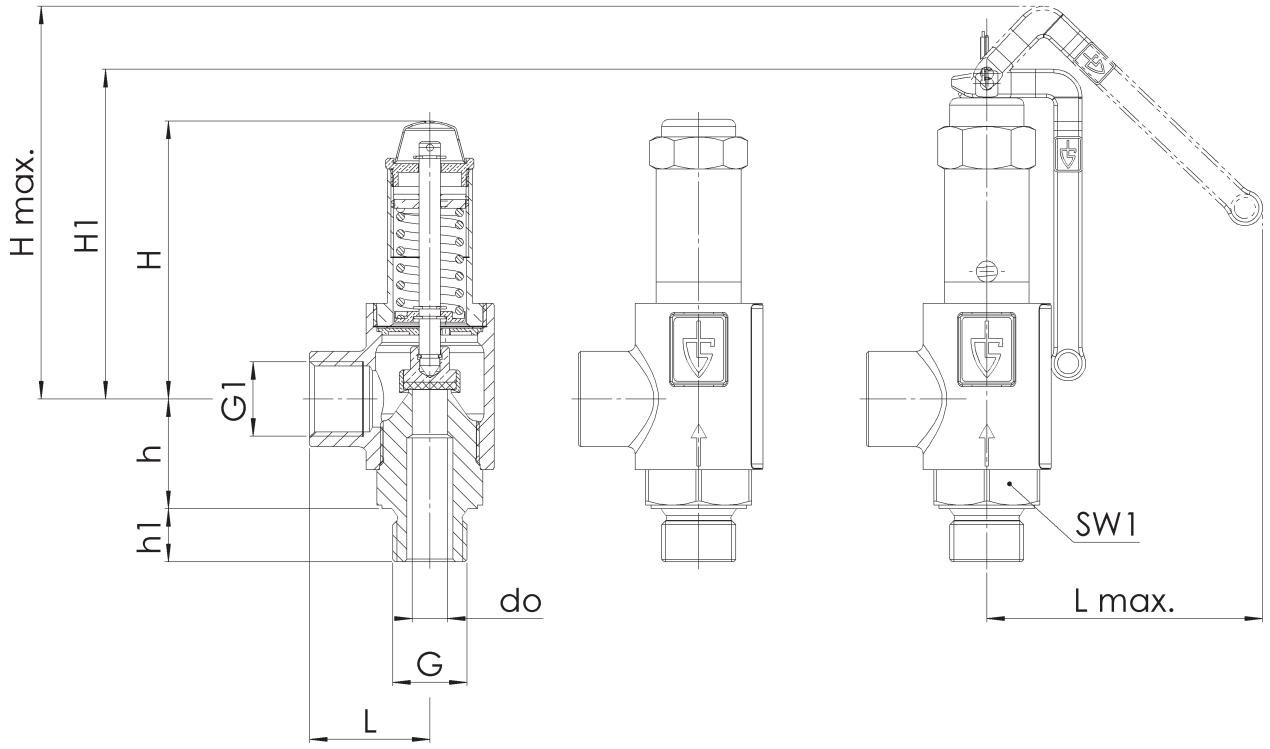

Series 461 ■ INDIVIDUAL SELECTION / VALVE CONFIGURATION

Series	Valve version	Medium	Lifting device	Nominal diameter DN	Connection type		Connection size		Seal	Options	Set pressure	Quantity
					Inlet	Outlet	Inlet	Outlet				
461	*t*	*G*	*0*	*8*	m	f	*8*	15	*PTFE*		*12,3*	*2*
461					m	f		15				
461					m	f		15				
461					m	f		15				

■ PROPERTIES

GOX	Especially for gaseous O2 applications by employment of specific materials including oil- and grease free production process	☐			☐
P01	Oil- and grease-free production	☐			☐
		☐			☐

■ CERTIFICATES / APPROVALS

C01	Factory certificate acc. DIN EN 10204 2.2 (WKZ 2.2)	☐	C06	ATEX evaluation acc. to 2014/34/EU	☐
C02	Test certificate acc. DIN EN 10204 3.1 (WPZ 3.1)	☐	C07	SIL evaluation relating to IEC 61508-2	☐
C03	Material test certificate acc. DIN EN 10204 3.1 (MPZ 3.1) (pressure retaining part)	☐	C09	Seat tightness test with helium, leak detection method under vacuum incl. Factory Inspection Certificate 3.1 acc. to DIN EN 10204	☐
C04	TÜV/DEKRA individual inspection acc. EN 10204 3.2 (TÜV/DEKRA-APZ)	☐	C10	Certificate of oil- and grease free production	☐
C05	Sealing material Manufacturer certification (FDA, USP 3, 3-A,…), Please indicate description of certificate:	☐	C11	Certification of the production process especially for gaseous oxygen applications by employment of specific materials	☐

■ ADMISSIONS / ACCREDITATIONS

AA1	EC Type examination acc. to Directive 2014/68/EU	☐	AK1	DNV-GL (DNVGL) type approval	☐
AA2	TÜV component test acc. to VdTÜV specification sheet SV 100	☐	AK2	Lloyd's Register (LR) type approval	☐
AA4	EAC - certificate/declaration with passport for the valve and laser marking of the valve	☐	AK3	American Bureau of Shipping (ABS) type approval	☐
AA5	Manufacture License of Special Equipment People's Republic of China (ML)	☐	AK4	Bureau Veritas (BV) type approval	☐
		☐	AK5	Russian Maritime Register of Shipping (RMRS) type approval	☐
		☐	AK6	Registro Italiano Navale (RINA) type approval	☐
		☐	AL	Individual inspection by notified body inspector – (body to be indicated):	☐

■ ENQUIRY

Copy and send to: order@goetze-armaturen.de.

Order form easily to be found online under the section for each series.

■ CAPACITY TABLE ACC. TO ISO 4126-1 / AD2000 A2

Series 461: Blowing-off rates at 10% above set pressure

Nominal diameter DN		8			10			15		
		d0 = 6 mm			d0 = 8 mm			d0 = 10 mm		
Set pressure bar		I	II	III	I	II	III	I	II	III
Air I	0,5	18,9	15,5	0,6	29,7	24,3	0,9	49,4	40,4	1,4
Nm³/h	1,0	26,1	20,8	0,8	41,9	33,4	1,2	73,5	58,5	2,0
	1,5	33,8	26,7	0,9	55,3	43,8	1,4	97,5	77,2	2,4
Steam II	2,0	41,3	32,5	1,1	68,4	53,8	1,7	120,1	94,5	2,8
kg/h	2,5	48,8	38,2	1,2	81,0	63,4	1,9	141,7	110,9	3,1
	3,0	56,2	43,8	1,3	93,4	72,8	2,0	163,3	127,3	3,4
	3,5	63,4	49,3	1,4	105,8	82,2	2,2	184,2	143,1	3,7
Water III	4,0	70,6	54,7	1,5	118,3	91,6	2,4	205,1	158,8	3,9
m³/h	4,5	77,8	60,1	1,6	130,4	100,7	2,5	226,0	174,5	4,2
	5,0	85,1	65,5	1,7	142,4	109,7	2,6	246,9	190,2	4,4
	5,5	92,3	70,9	1,8	154,5	118,8	2,8	267,8	205,9	4,6
	6,0	99,5	76,3	1,8	166,6	127,8	2,9	288,7	221,5	4,8
	6,5	106,7	81,7	1,9	178,6	136,8	3,0	309,6	237,1	5,0
	7,0	113,9	87,1	2,0	190,7	145,8	3,1	330,5	252,7	5,2
	7,5	121,1	92,5	2,1	202,7	154,8	3,2	351,4	268,3	5,4
	8,0	128,3	97,8	2,1	214,8	163,7	3,3	372,3	283,8	5,6
	8,5	135,5	103,2	2,2	226,8	172,7	3,4	393,2	299,4	5,7
	9,0	142,8	108,6	2,3	238,9	181,7	3,5	414,1	314,9	5,9
	9,5	150,0	113,9	2,3	250,9	190,7	3,6	435,0	330,5	6,1
	10,0	157,2	119,3	2,4	263,0	199,6	3,7	455,8	346,0	6,2
	11,0	171,6	130,0	2,5	287,1	217,6	3,9	497,6	377,1	6,5
	12,0	186,0	140,7	2,6	311,2	235,5	4,1	539,4	408,1	6,8
	13,0	200,4	151,4	2,7	335,3	253,3	4,3	581,2	439,1	7,1
	14,0	214,8	162,1	2,8	359,4	271,3	4,4	623,0	470,2	7,4
	15,0	229,2	172,9	2,9	383,5	289,2	4,6	664,8	501,4	7,6
	16,0	243,6	183,5	3,0	407,6	307,1	4,7	706,6	532,3	7,9
	17,0	258,0	194,3	3,1	431,7	325,1	4,9	748,3	563,4	8,1
	18,0	272,4	205,0	3,2	455,8	343,0	5,0	790,1	594,6	8,4
	19,0	286,8	215,8	3,3	479,9	361,0	5,2	831,9	625,8	8,6
	20,0	301,2	226,5	3,4	504,0	379,0	5,3	873,7	657,0	8,8
	21,0	315,7	237,3	3,5	528,1	397,0	5,4	915,5	688,2	9,0
	22,0	330,1	248,0	3,5	552,3	415,0	5,5	957,3	719,4	9,3
	23,0	344,5	258,8	3,6	576,4	433,1	5,7	999,1	750,7	9,5
	24,0	358,9	269,6	3,7	600,5	451,2	5,8	1040,8	782,0	9,7
	25,0	373,3	280,4	3,8	624,6	469,2	5,9	1082,6	813,4	9,9
	26,0	387,7		3,9	648,7		6,0	1124,4		10,1
	27,0	402,1		3,9	672,8		6,1	1166,2		10,2
	28,0	416,5		4,0	696,9		6,3	1208,0		10,4
	29,0	430,9		4,1	721,0		6,4	1249,8		10,6
	30,0	445,3		4,1	745,1		6,5	1291,6		10,8
	32,0	474,1		4,3	793,3		6,7	1375,1		11,2
	34,0	502,9		4,4	841,5		6,9	1458,7		11,5
	36,0	531,8		4,5	889,7		7,1	1542,3		11,8
	38,0	560,6		4,7	938,0		7,3	1625,8		12,2
	40,0	589,4		4,8	986,2		7,5	1709,4		12,5
	42,0	618,2		4,9	1034,4		7,7	1793,0		12,8
	44,0	647,0		5,0	1082,6		7,8	1876,6		13,1
	46,0	675,8		5,1	1130,8		8,0	1960,1		13,4
	48,0	704,6		5,2	1179,0		8,2	2043,7		13,7
	50,0	733,5		5,3	1227,2		8,4	2127,3		13,9
	51,0	747,9		5,4	1251,3		8,4	2169,1		14,1
	52,0	762,3		5,4	1275,4		8,5	2210,8		14,2
	53,0	776,7		5,5	1299,5		8,6	2252,6		14,4
	54,0	791,1		5,6	1323,7		8,7	2294,4		14,5
	55,0	805,5		5,6	1347,8		8,8	2336,2		14,6
	56,0	819,9		5,7	1371,9		8,8	2378,0		14,8
	57,0	834,3		5,7	1396,0		8,9	2419,8		14,9
	58,0	848,7		5,8	1420,1		9,0	2461,6		15,0
	59,0	863,1		5,8	1444,2		9,1	2503,4		15,2
	60,0	877,5		5,9	1468,3		9,2	2545,1		15,3
	61,0	891,9		5,9	1492,4		9,2	2586,9		15,4
	62,0	906,3		5,9	1516,5		9,3	2628,7		15,5
	63,0	920,8		6,0	1540,6		9,4	2670,5		15,7
	64,0	935,2		6,0	1564,7		9,5	2712,3		15,8
	65,0	949,6		6,1	1588,8		9,5	2754,1		15,9
	66,0	964,0		6,1	1612,9		9,6	2795,9		16,0
	67,0	978,4		6,2	1637,0		9,7	2837,6		16,1
	68,0	992,8		6,2	1661,1		9,7	2879,4		16,3
	69,0	1007,2		6,3	1685,2		9,8	2921,2		16,4
	70,0	1021,6		6,3	1709,4		9,9	2963,0		16,5

Series 461

Coefficient of discharge α_w i.e. K_{dr} as a function of the relation between the pressures p_{a0} / p_0 of vapours and gases

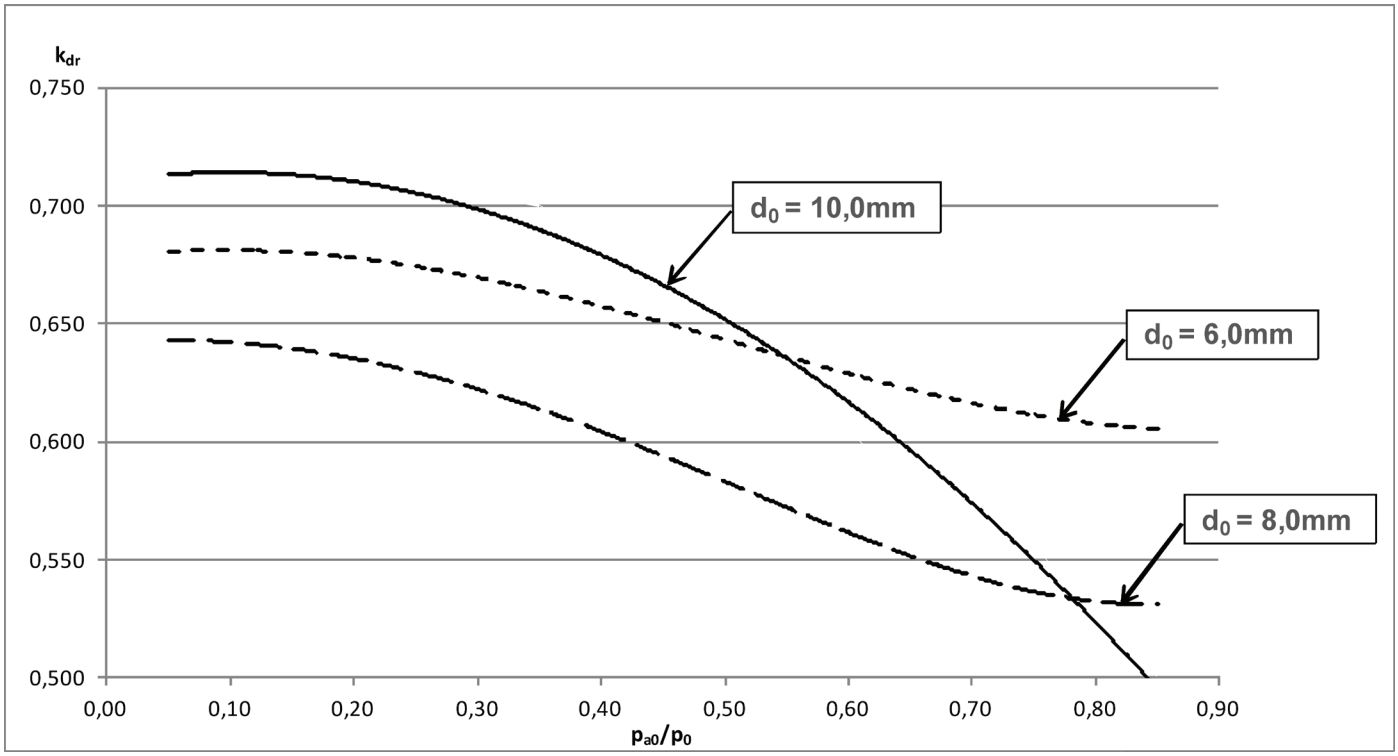

$$\frac{p_{a0}}{p_0} = \frac{\text{counter pressure bar(a)}}{\text{blow-off pressure bar(a)}}$$

p_{atm} = ambient i.e. atmospheric pressure = 1,01325 bar(a)

Example to determine the coefficient of discharge α_w i.e. K_{dr} in relation to the set-pressure p_{set}

Set-pressure	Blow-off pressure
p_{set} bar(g)	p_0 bar(a)
≤ 1	p_{set} + p_{atm} + 0,1 bar
> 1	p_{set} x 1,1 + p_{atm}

For a safety valve set at = 0,5bar(g) and blowing-off into the enviroment the blow-off pressure is determined as follows:

Set-pressure	0,5	bar(g)
+ Atmospheric pressure	1,01325	bar(a)
+ permissable overpressure	0,1	bar(g)
~ Blow-off pressure	1,61	bar(a)

Consequently:

$$\frac{p_{a0}}{p_0} = \frac{1{,}01325 \text{ bar(a)}}{1{,}61 \text{ bar(a)}} = 0{,}72$$

and extracted from the chart α_w i.e. K_{dr} = 0,56 at d_0=8,0mm

Units:
bar(a) ≙ absolute pressure - pressure in relation to absolute vacuum (zero), e.g. p_{atm} = 1,01325 bar(a)
bar(g) ≙ overpressure - pressure above i.e. in relation to p_{atm} = 1,01325 bar(a)