→ Series 492 GOX

SUITABLE FOR

Air, gases and vapours	neutral and non-neutral

EXAMPLES OF USE

For the protection of:
- pressure tanks and
- pressure systems

for gaseous oxygen and oxygen mixed gases. Please observe plant-specific regulations and use of appropriate valve version and sealing material.

- high-pressure compressors
- pressure tanks
- pressure cylinder pack
- common O2 applications
- technical gas industry
- medical healthcare gas industry

Safety valves are set and sealed at the factory.

MATERIAL

SPECIFICATION

1/4“ – 3/4“ | – 40°C to + 60°C | 50 – 420 bar

APPROVALS

TÜV-Type test approval 2100	**D/G**
EC type examination	**S/G**
ASME	**G**
CRN	**G**
TSG ZF001-2006	**D/G (S/G)**
KGS	**G**
BAM	
Air Liquide / CTE	
TR ZU 032/2013 -TR ZU 010/2011	**D/G (S/G)**

Requirements

AD 2000 Data sheet A2	ASME-Code Sec. VIII Div. 1
DIN EN ISO 4126-1	KGS AA 319
DGR 2014/68/EU	BG RCI M034

Classification society

DNVGL	DNVGL
Lloyd’s Register EMEA	LR EMEA
Bureau Veritas	BV
Russian Maritime Register of Shipping	RS

MATERIALS

Component	Material	DIN EN	ASME
Inlet body	Monel / Stellite	2.4360 / Stellite	UNS N04400 / Stellite
Outlet body	Brass	CW617N	CW617N
Internal parts	Monel / Stainless steel	2.4360 / 1.4404	
Spring	Spring steel	VDSiCr	UNS N04400 / 316L

t	gastight version of spring housing	for neutral and non-neutral media. The environment is protected from being affected by the medium. Model with positionable angled body and without lifting device.

■ TYPE OF LIFTING MECHANISM

K	Standard with twist-type lifting mechanism
0	without lifting device

■ AVAILABLE NOMINAL DIAMETERS AND CONNECTION SIZES

Nominal diameter DN		**10**			
Inlet		1/4“ (8)	3/8“ (10)	1/2“ (15)	3/4“ (20)
Outlet	1/2“ (15)	■	■	■	
	3/4“ (20)	■	■	■	■
	1“ (25)	■	■	■	■

■ TYPE OF CONNECTION INLET / OUTLET THREADED CONNECTIONS

m / f	with positionable angled body	Male thread BSP-P / Female thread BSP-P	DIN EN ISO 228-1 / DIN EN ISO 228-1
NPT-m / NPT-f	with positionable angled body	Male thread NPT / Female thread NPT	ANSI B1.20.1 / ANSI B1.20.1

■ SEALS

MD	Metal-to-metal sealing / Monel / Stellite	Flat seal 50 – 420 bar	–40°C to +60°C

■ NOMINAL DIAMETERS, CONNECTIONS, INSTALLATION DIMENSIONS

Series 492 GOX: Connection, installation dimensions, ranges of adjustment					
Nominal diameter	**DN**	**10**			
Connection DIN EN ISO 228	**G**	1/4" (8)	3/8" (10)	1/2"(15)	3/4"(20)
	G1	1/2“ (15) 3/4“ (20) 1“ (25)	1/2“ (15) 3/4“ (20) 1“ (25)	1/2“ (15) 3/4“ (20) 1“ (25)	3/4“ (20) 1“ (25)
Installation dimensions in mm	**H**	133	133	133	133
	H1	28	28	28	28
	h	12	12	14	16
	SW	27	27	27	27
red. coefficient of discharge EN ISO 4126-1	**αw /Kdr (D/G)**	0,73	0,73	0,73	0,73
rated slope ASME	**(D/G)**	0,669	0,669	0,669	0,669
flow area	**d0**	6	6	6	6
Weight	**kg**	0,74	0,74	0,74	0,74
Range of adjustment EN ISO 4126-1	**bar**	50-420	50-420	50-420	50-420
Range of adjustment ASME	**psi**	725-6090	725-6090	725-6090	725-6090

■ MAIN DIMENSIONS, INSTALLATION DIMENSIONS

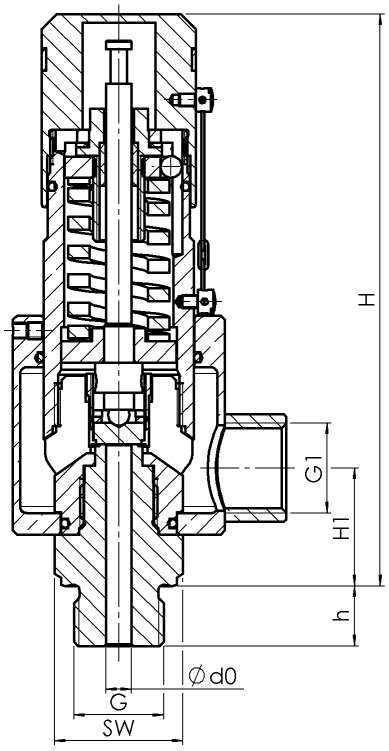

Series 492 GOX ■ INDIVIDUAL SELECTION / VALVE CONFIGURATION

Series	Valve version	Medium	Lifting device	Nominal diameter DN	Connection type		Connection size		Seal	Options	Set pressure	Quantity
					Inlet	Outlet	Inlet	Outlet				
492	t	G	0	10	*m*	*f*	*15*	*20*	MD	GOX	*300*	*2*
492	t	G	0	10					MD	GOX		
492	t	G	0	10					MD	GOX		
492	t	G	0	10					MD	GOX		

■ PROPERTIES

GOX	Especially for gaseous O2 applications by employment of specific materials including oil- and grease free production process	☐			☐
		☐			☐
		☐			☐

■ ADMISSIONS / ACCREDITATIONS

AA1	EC Type examination acc. to Directive 2014/68/EU	☐	AK1	DNV-GL (DNVGL) type approval	☐
AA2	TÜV component test acc. to VdTÜV specification sheet SV 100	☐	AK2	Lloyd's Register (LR) type approval	☐
AA3	Certification acc. to ASME Boiler and Pressure Vessel Code, Section VIII.Div 1 (ASME)	☐	AK3	American Bureau of Shipping (ABS) type approval	☐
AA4	EAC - certificate/declaration with passport for the valve and laser marking of the valve	☐	AK4	Bureau Veritas (BV) type approval	☐
AA5	Manufacture License of Special Equipment People's Republic of China (ML)	☐	AK5	Russian Maritime Register of Shipping (RMRS) type approval	☐
AA6	Certification acc. to. Korean Gas Safety Corporation (KGS)3	☐	AK6	Registro Italiano Navale (RINA) type approval	☐
AA7	Registration according to Canadian Registration Number (CRN)[4]	☐	AL	Individual inspection by notified body inspector – (body to be indicated):	☐

[3]KGS only in combination with ASME | [4]CRN only in combination with ASME

■ ENQUIRY

Copy and send to: order@goetze-armaturen.de.

Order form easily to be found online under the section for each series.

CAPACITY TABLE ACC. TO ISO 4126-1 / AD2000 A2

Series 492 GOX: Blowing-off rates at 10% above set pressure

Nominal diameter DN		10	
Set pressure bar		d0 = 6,0 mm	
		I	II
Air I	50,0	817	782
Nm³/h	55,0	900	863
	60,0	984	944
Gaseous oxygen II	65,0	1069	1027
Nm³/h	70,0	1154	1110
	75,0	1240	1194
	80,0	1327	1279
	85,0	1414	1364
	90,0	1502	1451
	100,0	1679	1626
	110,0	1858	1805
	120,0	2038	1986
	130,0	2221	2171
	140,0	2405	2359
	150,0	2590	2549
	160,0	2777	2742
	170,0	2964	2937
	180,0	3151	3134
	190,0	3339	3332
	200,0	3527	3531
	210,0	3714	3731
	220,0	3902	3931
	230,0	4089	4132
	240,0	4275	4332
	250,0	4460	4532
	260,0	4644	4731
	270,0	4828	4929
	280,0	5010	5126
	290,0	5191	5322
	300,0	5370	5517
	310,0	5549	5710
	320,0	5726	5901
	330,0	5901	6091
	340,0	6075	6279
	350,0	6248	6465
	360,0	6419	6650
	370,0	6589	6833
	380,0	6757	7014
	390,0	6924	7193
	400,0	7089	7371
	410,0	7253	7547
	420,0	7416	7721

The calculation of the substance data is based on the extended substance data calculation according to CONVAL. The results achieve a higher accuracy, especially at higher pressure, because of the isentropic component and the real gas factor, which are usually assumed to be constant and change significantly with increasing pressure.

CAPACITY TABLE ACC. TO ASME-CODE SEC. VIII DIV. 1

Series 492 GOX: Blowing-off rates at 10% above set pressure

Nominal diameter DN		10	
Set pressure psi(g)		d0 = 6,0 mm	
		I	II
Air I	725	543	519
SCFM	750	562	538
	775	580	557
Gaseous oxygen II	800	600	577
SCFM	850	638	616
	900	677	654
	950	715	693
	1000	754	732
	1100	832	810
	1200	910	890
	1300	989	970
	1400	1069	1052
	1500	1149	1135
	1600	1229	1218
	1700	1310	1303
	1800	1392	1389
	1900	1474	1476
	2000	1556	1563
	2200	1722	1735
	2400	1889	1909
	2600	2057	2084
	2800	2225	2260
	3000	2393	2437
	3200	2561	2615
	3400	2729	2792
	3600	2896	2969
	3800	3062	3145
	4000	3227	3321
	4200	3391	3495
	4400	3554	3669
	4600	3716	3841
	4800	3876	4011
	5000	4035	4180
	5200	4192	4347
	5400	4348	4513
	5600	4502	4677
	5800	4654	4839
	6000	4805	5000
	6090	4873	5073

The calculation of the substance data is based on the extended substance data calculation according to CONVAL. The results achieve a higher accuracy, especially at higher pressure, because of the isentropic component and the real gas factor, which are usually assumed to be constant and change significantly with increasing pressure.