MODEL:
M542
DIRECT MOUNT MANIFOLD

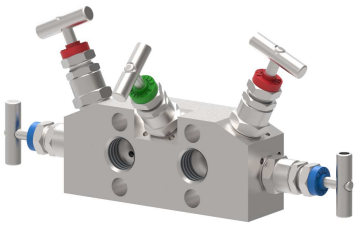

I.T.E. ITALIAN TECHNICAL EQUIPMENT

Suitable for direct mounting to gauge transmitter or a differential pressure transmitter.

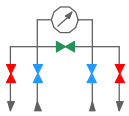

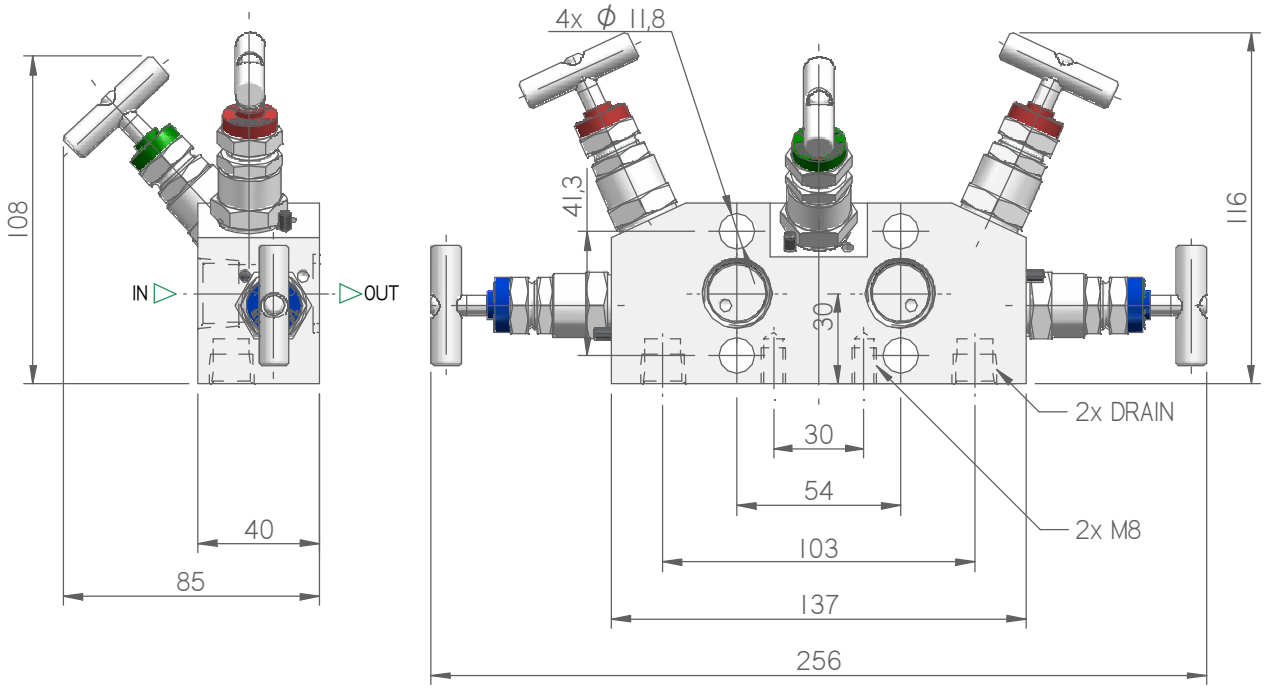

MODEL SELECTION

MODEL	RATING	MATERIAL	PACKING	IN	OUT	VENT	CODE	WEIGHT	NOTE
M542	3K psi	AISI 316L	PTFE	1/2" NPT-F	IEC 61518/B	1/4" NPT-F	M542-03ST8NFLB4	2,8 Kg	Packing material PTFE as standard max temperature 180 °C. The dimensions shown apply only to the illustrated valve – if you need the dimensions for your individual type or should you still not find your options at all please contact the factory.
		ASTM A105					M542-03AT8NFLB4		
		F51					M542-03DT8NFLB4		
		F55					M542-03ET8NFLB4		
		ALLOY 400					M542-03FT8NFLB4		
		C276					M542-03TT8NFLB4		
		6MO					M542-03HT8NFLB4		
		I625					M542-03IT8NFLB4		
	6K psi	AISI 316L					M542-06ST8NFLB4		
		ASTM A105					M542-06AT8NFLB4		
		F51					M542-06DT8NFLB4		
		F55					M542-06ET8NFLB4		
		ALLOY 400					M542-06FT8NFLB4		
		C276					M542-06TT8NFLB4		
		6MO					M542-06HT8NFLB4		
		I625					M542-06IT8NFLB4		

I.T.E. s.r.l. COMMITS ITSELF TO CONSTANTLY IMPROVE ITS PRODUCTS AND THEREFORE IT RESERVES THE RIGHT TO MODIFY DATA, FEATURES WITHOUT NOTICE.

DIRECT MANIFOLD

	1	2	3	4	5	6	7	8	9	10	11	12	13	14	15	16	17
EX	M	5	4	2	-	0	6	S	T	F	L	A	F	L	B	4	

MODEL	
M542	DIRECT MANIFOLD 5 VLV 60x40 I/O 180° THD/FLG WITH DRAIN
RATING	
03	Serie 3000
06	Serie 6000
MATERIAL	
S	Aisi 316L
A	A105
D	F51
E	F55
F	Monel 400
G	C276 Hastelloy
H	6 Mo/F44
I	Inconel 625
PACKING	
T	Teflon
G	Graphoil
IN	
4	1/4"
6	3/8"
8	1/2"
FL	FLANGED
THREAD	
N	NPT
I	BSPP GAS (ISO 1179)
K	BSPT R/RC (ISO 7)
B	Butt weld
S	Socket Weld
A	FLANGED
OUT	
FL	FLANGED
FLANGED	
A	FLANGED ITE
B	IEC 61518 - B
DRAIN	
	/
4	1/4 NPT
OPTIONS	
	/
B	All component 316L
C	Prove speciali
D	Custom marking
E	T-Bar 316L
L	Lox cleaning
TI	Isolate Anti-tamper
K	Padlock for all anti tamper bonnet
T	Mounted plug drain
KT	Padlock for all T-bar bonnet